nobis

YOUR STOVE, OUR PASSION

# EN - Installation, use and maintenance manual

A10 C LIGHT /
A10 C LIGHT 2020

Dear Customer. Thank you for choosing a product from our range.
You are invited to read this manual carefully before using it, to
take full advantage of all its features, in complete safety.
This manual contains information necessary for correct installation,
start-up, use, cleaning and maintenance of the product.
Keep this manual in an appropriate place having carefully consulted it.
Improper installation, maintenance not carried out correctly and improper use of the product
relieve the manufacturer of any liability towards people or property.
All rights reserved. No part of this instructions manual can be reproduced or
transmitted with any electronic or mechanical device, including photocopying, recording or
any other saving system, for any proposals other than the exclusive use
by the purchaser's staff, without express written permission from the manufacturer.

## MANUAL INDEX


1 Introduction 4
- 1.1 Symbols 4
- 1.2 Planned use 4
- 1.3 Improper use 4
- 1.4 Importance of the manual 4
- 1.5 General safety warnings 4
- 1.6 Legal warranty 5
- 1.7 Exclusions from the warranty 5
- 1.8 Spare parts 6
- 1.9 Identification plate 6
- 1.10 Disposal of the product 6
- 1.11 Hermetic product 6

2 Characteristics of the pellet 6

3 Installation 7
- 3.1 Air intake 7
- 3.2 Smoke channel and fittings 7
- 3.3 Chimney flue 8
- 3.4 Chimney pot 8
- 3.5 Hermetic product installation 8
- 3.6 Examples of correct installation 9
- 3.7 Documentation to issue 10
- 3.8 Product unpacking 10
- 3.9 Smoke exhaust assembly/canalization 10
- 3.10 Covering assembly 14
- 3.11 Electrical connection 15

4 Maintenance 16
- 4.1 Smoke system maintenance 16
- 4.2 Product maintenance 16

5 Technical data of the product 16
- 5.1 Product data sheet 16
- 5.2 Technical features 16
- 5.3 Dimensions 17
- 5.4 Safe distances 17

6 Product configuration 17
- 6.1 Configuration of handheld device 17
- 6.2 Configuration of ext thermostat 18
- 6.3 Pellet loading 18

7 Description of remote commands 19
- 7.1 Description of receiver 19
- 7.2 Description handheld device keys 19
- 7.3 Description handheld device display 19
- 7.4 Flat battery signalling 20
- 7.5 Concise icons diagram 20

8 Menu browsing 21

9 First start-up instructions 21
- 9.1 Date and time setting 21
- 9.2 Calibration of handheld device probe 21
- 9.3 User/auto management 22
- 9.4 Ambient temperature setting 22
- 9.5 Fireplace power setting 22
- 9.6 Switching on the product 22

10 The working phase 23
- 10.1 Saving mode 23
- 10.2 Air conditioning comfort function 23
- 10.3 Powerful function 24
- 10.4 Ventilation management 25

11 Description of the menu functions 25
- 11.1 Thermostat with timer function 25
- 11.2 Auger loading function 26
- 11.3 Pellet/extraction mix 27
- 11.4 Stove status 27
- 11.5 Enabling external thermostat 28
- 11.6 Language 28
- 11.7 Contrast 28
- 11.8 FW version 29
- 11.9 Anticondensation 29

12 Duct channels 29
- 12.1 Setting single channel 29
- 12.2 Setting timer channel 30
- 12.3 Display channel status 30
- 12.4 Setting double channel 31
- 12.5 Setting timer channel 31
- 12.6 Display channel status 32

13 Phases concise diagram 32

14 Functions concise diagram 32

15 Signalling concise diagram 33

16 Anomalies concise diagram 33

17 Description of alarms 34

18 Cleaning the appliance 36
- 18.1 Cleaning the fireplace 36
- 18.2 Cleaning the glass door 37
- 18.3 Cleaning the ash pan 37

19 Wiring diagram 39

# 1 INTRODUCTION

The product by Nobis was designed and manufactured in compliance with the reference standards for the manufacturing products (EN13240 wood stoves, EN14785 pellet appliances, EN13229 fireplaces/ inserts for wood, EN12815 wood stoves), with high quality materials. The products also comply with the essential requirements of the Directive 2014/35/ EU (Low Voltage) and the Directive 2014/30/EU (Electromagnetic Compatibility).
The printing, translation and reproduction, even partial, of this manual is intended as binding by the manufacturer's authorisation and the content of working logic and explanatory figures is considered not be be disclosed.
Always consult the authorised technicians if in doubt and/or confused by operation of the the product.
*The manufacturer reserves the right to make changes to specifications and technical and/or working features of the product at any time without prior warning.*

## 1.1 SYMBOLS

The following manual contains symbols which highlight the importance of particular descriptions or concepts;

INFORMATION: Compliance with the specifications guarantees correct operation of the product.

ATTENTION: Symbol used to identify particularly important information

DANGER: The presence of this symbol indicates utmost attention is required, to guarantee user and product safety.

## 1.2 PLANNED USE

The product in this manual, is a fireplace for domestic heating, feed by automatic loading and exclusively with wood pellets.

The product was designed and manufactured to work in safety if the following conditions occur:
- installation by specialist staff according to the specific reference standards;
- use within the limits declared on the product data sheet and in this manual;
- compliance with technical procedures described in the manual;
- carrying out routine maintenance within the times and methods indicated in this manual;
- prompt execution of extraordinary maintenance if necessary (malfunctioning);
- activity and maintenance of safety devices (do not remove or bypass this devices).

## 1.3 IMPROPER USE

The product must be intended for the use for which it was expressly designed; for any other use, the manufacturer cannot be held in any way liable for damage caused to people, animals or property.
Improper use is intended as:
- use of the product as an incinerator;
- use of the product with fuel other than wood pellets with a diameter of 6 mm;
- use of the product with liquid fuel;
- use of the product with the fire door open and/or glass broken and/or ash pan removed and/or pellet tank open.

Any other use of the appliance other than that planned must be authorised in advance in writing by the manufacturer.
Furthermore, the manufacturer cannot be held in any way liable for errors in installation, adjustment or maintenance of the product.

## 1.4 IMPORTANCE OF THE MANUAL

The manual has the purpose of providing essential rules for correct installation, use and maintenance of the product.
PRESERVATION: Keep the manual in a place that is easy and quick to find;
DETERIORATION OR LOSS: Consult the official site to download the manual;
PRODUCT TRANSFER: In the event of sale between private individuals of the product, the owner is obliged to deliver the product with the following manual.

## 1.5 GENERAL SAFETY WARNINGS

Non-compliance with the provisions of this manual can cause damage to people, animals and property.
- Installation, testing of the system, functionality testing and initial calibration of the product must only be carried out by qualified and authorised staff.
- The product must be connected to a single chimney flue that guarantees the draught declared by the manufacturer and which complies with the installation standards outlined in the assembly location of the product.
- The premises where the product is installed must be adequately ventilated (air intake).
- Do not touch the hot surfaces without adequate protective equipment, to avoid burns.
- When in operation, the external surfaces reach high temperatures.
- It is forbidden to make changes to the product unless expressly communicated in writing by the manufacturer.
- In the event of fire in the chimney flue, contact the Fire Brigade immediately.

- The product can be used by children over 8 years of age and people with reduced physical, sensor or mental capacity, or without experience or the necessary know-how, provided they are supervised, or have received instructions on the safe use of the appliance and have understood the dangers involved. Children must not play with the appliance.
- Cleaning and maintenance intended to be carried out by the user must not be carried out by children without supervision.
- Do not dry washing on the the product.
- Fuel and flammable materials must be kept a necessary distance from the product. Danger of fire.
- The product must be electrically connected to a system equipped with a sufficient ground system.
- In the event of a fault on the switch on system, do not force switch on using flammable materials and consult an authorised technician.
- For the no hermetic product, installation is forbidden in small rooms and bedrooms.
- Installation is forbitten in surroundings with explosive atmospheres.

## 1.6 LEGAL WARRANTY

The user, to benefit from the legal warranty, must strictly comply with the provisions indicated in this manual. In particular:

- always work within the use limitations of the product;
- always carry out routine maintenance;
- authorise people to use the machine with proven capacity, attitudes and who are adequately trained for the purpose;
- use original spare parts and specifically for the appliance model.

It is also necessary to provide a:

- fiscal receipt with the purchase date;
- a certificate of compliance issued for installation by authorised staff.

Non-compliance with the provisions contained in this manual will imply immediate expiry of the warranty on the product and on any spare parts assembled later.

## 1.7 EXCLUSIONS FROM THE WARRANTY

The warranty excludes all malfunctions and/or damage to the appliance resulting from the following causes:

- damage caused by transport and/or movement;
- all parts resulting as being faulty due to negligence or careless use, wrong maintenance, non-conforming installation with that specified by the manufacturer (refer to the installation and use manual supplied with the appliance);
- further damage caused by wrong intervention by the user in an attempt to solve the initial fault;
- aggravated damage caused by further use of the appliance by the user once the defect was noted;
- in the presence of a boiler, any corrosion, scale or breakages caused by stray current, condensate, abrasion or acidity in the water, scale removal treatments carried out improperly, no water, sludge or limescale deposits;
- inefficiency of the chimneys, chimney flues or parts of the system on which the appliance depends;
- damage caused by tampering with the appliance, atmospheric agents, natural disasters, vandalism, electrical discharge, fire, faulty electrical and/or plumbing system.

The following are also excluded from the warranty:

- parts subject to normal wear such as gaskets, glass, coverings and grates in cast iron, painted, chrome-plated or gold-plated parts, handles and electrical cables, lights, switch on resistor, indicator lights, knobs, all parts that can be removed from the fireplace (e.g. refractory, brazier);
- colour variations of painted and ceramic parts, as well as the ceramic cracks since they are natural features of the material and use of the product;
- masonry works;
- parts of the system (if present) not supplied by the manufacturer;

Any technical intervention on the product to eliminate the aforementioned defects or resulting damage should therefore be agreed with the Technical Support Centre, which reserves the right to access or refuse the relevant job and in any case they will not be carried out under warranty, but rather Technical Support will provide the possible conditions to specifically agree upon and according to rates in force for the works to carry out. The user will also be responsible for the expenses which will be necessary to resolve any wrong technical intervention, tampering or however damaging factors for the appliance not attributable to the original defects. Notwithstanding the restrictions imposed by legislation and regulations, every warranty to contain atmospheric and acoustic pollution is also excluded.

## 1.8 SPARE PARTS

Only use original spare parts.
Do not wait for the components to wear from use before replacing them.
This measure promotes prevention of accidents caused by people, animals or property in the event of product malfunctioning caused by faults.
You are advised to contact authorised staff to replace spare parts, worn parts and for extraordinary maintenance of the the product.

## 1.9 IDENTIFICATION PLATE

The plate placed on the back of the product outlines all the characteristic data of the appliance, including the manufacturer's data, the serial number and the CE marking.

## 1.10 PRODUCT DISPOSAL

Demolition and disposal of the product is the exclusive responsibility of the owner, who should do so in compliance with legislation in force in his
country on safety matters, with respect of and safeguarding the environment.
At the end of its useful life, the product must not be disposed of as urban waste.
It can be delivered to specific differentiated waste collection centres made available by municipal administrations, or dealers who provide this service.
Disposal of the product as differentiated waste means possible negative consequences for the environment and health are avoided, deriving from inadequate disposal. Furthermore, it allows
recovery of materials composing the product to obtain important savings in energy and
resources.

## 1.11 HERMETIC PRODUCT

The products manufactured with a perfectly hermetic
structure do not consume oxygen in the environment, since they take all the air from outside the home (if correctly installed) and can therefore be positioned inside all homes with a high level of insulation, such as "passive houses" or "with high energy efficiency". Thanks to this technology, there is no risk of smoke emissions in the environment and no ventilation grates are necessary.
As a result, no cold air flows are created in the environment making it less comfortable and reducing the overall efficiency of the system. Hermetic products can also be installed in the presence of forced ventilation or in premises which can go into negative pressure compared to outside.

# 2 CHARACTERISTICS OF THE PELLETS

Wood pellets are fuel made of pressed sawdust, often recovered from carpentry processing waste. The material used cannot contain any foreign substance such as glue, varnish or synthetic substances.
Sawdust, after drying and cleaning of impurities, it is pressed using a matrix: due to the high pressure, the sawdust heats activating the natural binders in the wood; by doing so, the pellet maintains its shape even without adding artificial substances. The density of wood pellets varies based on the type of wood and can exceed 1.5 - 2 times that of natural wood.
The cylinders have a diameter of 6mm and a variable length of 10 to 40mm.
Their density is equal to approx. 650 kg/m3. Due to the low water content (< 10%), they have a high energy content.
The main quality certifications for pellets on the European market today guarantee the fuel is within class A1 in according to ISO 17225-2:2014 (formerly EN 14961). Examples of these certifications are for example ENPlus, DINplus, Ö-Norm M7135, and guarantee they comply in particular with the following characteristics:

- heating power: 4.6 ÷ 5.3 kWh/kg;
- water content: ≤ 10% of weight;
- percentage of ash: max 1.2% of weight (A1 under 0.7%);
- diameter: 6±1/8±1 mm;
- length: 3÷40 mm;
- content: 100% untreated wood without any additional binder substances (percentage of bark max 5%);
- packaging: in sacks made from eco-compatible or bio-degradable.

The manufacturer recommends, for its products, use of class A1 certified fuel according to the standard En ISO 17225-2:2014, or certified DIN PLUS (more restrictive than class A1) or O-NORM M7135.

Pellets must be kept in a dry environment which is not excessively cold. You are also advised to keep some bags of pellets where the product is installed and operating, to dry them of any humidity present.
Non-compliance with this aspect reduces the thermal power of the fuel and means greater maintenance must be done on the product.

# 3 INSTALLATION

All local and national legislation and European standards must be met when installing and using the the product.

The assembly position must be chosen based on the environment, the discharge and the chimney flue. Check, with your local authority, if there are more restrictive provisions regarding the oxidising air intake, the smoke discharge system including the chimney flue and chimney pot.
The manufacturer cannot be held in any way liable in the event of installation non-compliant with legislation in force,
of incorrect premises air exchange or electrical connection non-conforming with standards and/or inappropriate use of the appliance.
Installation must be carried out by a qualified technician, who will issue the purchaser with a Declaration of Conformity for the system and will assume complete responsibility for final installation and resulting good operation of the product.
In particular, he should ascertain:

- there is an adequate oxidising air intake and good smoke discharge compliant with the type of product installed;
- other stoves or devices installed do not cause negative pressure in the room where the product is installed (only for hermetic appliances, a maximum of 15 Pa depression in the surroundings is permitted);
- when the product is on, there is no smoke back draught in the surroundings;
- smoke evacuation is implement in total safety (dimensioning, smoke seal, distances from flammable materials..).

Once the position is decided where to install the product, you need to pay attention:

- if the floor is made of combustible material, you should use protection in suitable material (steel, glass...) which also protects the front part from any falling burning fuel during cleaning operations:
- that the floor guarantees adequate load capacity.
  if the existing building does not meet this requirement, you should take appropriate measures (for example a load distribution plate).

## 3.1 AIR INTAKE

The installation premises of non-hermetic appliances must be sufficiently ventilated with specific openings, with particular attention on the position (they must NEVER be blocked), which consent air reintegration in the environment.
The air must be taken directly from outside (not from other rooms, garage, etc.) and must have a net useful section equal or higher than 80 $cm^2$ pellet burning stoves and thermostoves (EN 14785) and 100 $cm^2$ for boilers (EN 303-5).
The air intake is not necessary for installation of the hermetic appliances that take air directly from outside. Check and comply with the ventilation requirements for simultaneous operations with other combustion devices and in the presence of forced ventilation systems or hoods (refer to section 6.4 of UNI 10683).

## 3.2 SMOKE CHANNEL AND FITTINGS

The term smoke channel indicates the piping connecting the appliance to combustion with the chimney flue.
For heat generating appliances with an electric fan to expel the smoke, the following installation instructions must be followed, provided by the manufacturer concerning the maximum length and number of curves the smoke channels can have.
If no indications are given for maximum values or deriving from preliminary calculations according to UNI EN 13384-1, the following provisions must be applied:

- comply with the product standard EN1856-2;
- the horizontal sections must have a minimum slope of 3% upwards;
- the length of the horizontal section must be minimal and its projection on plan must not exceed 4 metres;
- the number of changes of direction including introduction in the chimney flue and excluding that by effect of using a "T" element in the appliances with rear smoke output, must not exceed 3;
- the changes of direction must not have an angle over 90°(45° curve recommended);
- the section must have a constant diameter equal to the output of the fireplace up to the fitting in the chimney flue;
- it is forbidden to use flexible metal and fibre cement piping, furthermore the piping must guarantee pressurised sealing;
- the smoke channels must not cross premises in which installation is forbidden of combustion appliances;
- Use watertight piping with silicone gaskets.

In any case, the smoke channels must be sealed by combustion and condensate products, as well as insulated if passing inside the installation premises.
Assembly is not permitted of draught manual adjustment devices on forced draught appliances.

You need to install a first vertical smoke channel section of at least 1 metre to guarantee correct smoke ejection.

## 3.3 CHIMNEY FLUE

When installing the chimney flue, the following provisions must be applied.

- comply with the product standard EN 1856-1;
- it must be installed using materials suitable to guarantee resistance to normal mechanical and chemical stress, and have a correct insulation, to avoid the formation of condensate, therefore it must be hermetically insulated;
- have a mainly vertical state and not be choked along its length;
- be correctly spaced using air cavities and insulated from flammable materials,
- the changes in direction must be at most 2 and with an angle not exceeding 45°;
- the chimney flue inside the home must however be insulated and can be inserted in a cavity provided it complies with the relevant piping standards;
- the smoke channel should be connected to the chimney flue using a "T" joint with an inspectionable collection chamber for collection of fuel residue and, in particular, for condensate collection.

It is not possible to connect the appliance to a chimney flue shared with other combustion appliances or in the presence of hood exhausts.

It is forbidden to use direct wall discharge or towards closed spaces or any other form of discharge not planned by legislation in force in the country of installation (In Italy, only roof discharge is permitted)

You are advised to check the safe distances which must be complied with in the presence of combustible materials and the type of insulating material to use (data available directly on the chimney flue plate)

## 3.4 CHIMNEY STACK

The standard UNI 10683 states the stack must meet the following characteristics:

- the smoke outlet section must be at least double the inner section of the chimney;
- shaped to prevent water or snow penetration;
- be built in such a way that wind cannot affect the smoke outlet (wind-proof cap);
- the opening measurement, which is measured between the lower coverage protective layer and the lower point of the smoke outlet section into the atmosphere, must be outside the back draught area;
- Be built far from antennas or satellite dishes and must never be used as a support.

## 3.5 HERMETIC PRODUCT INSTALLATION

In the event of installation of a hermetic product, you can execute one of the following types of connection with the piping:

- smoke discharge (1) and recovery of oxidising air directly from outside (2)

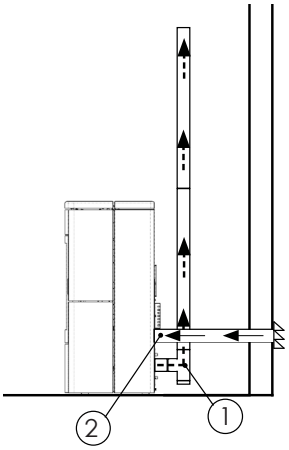


- smoke discharge (1) and oxidising air channelling (2) taking advantage of its coaxial discharge to expel the smoke and pick the air; therefore, installation is not necessary of a grate to recirculate the air inside the premises where the the product.

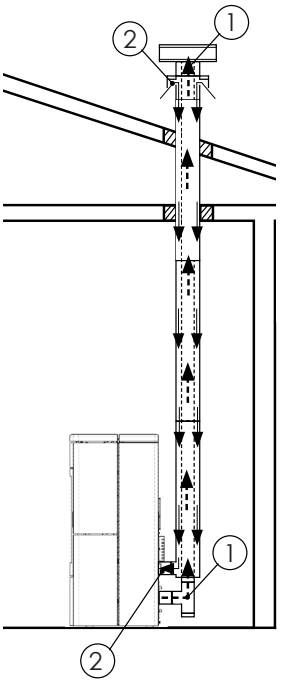


For coaxial installation or air sampling directly from the outside, it is recommended not to exceed 2.5 / 3 linear meters in order to ensure correct oxygen supply to combustion.

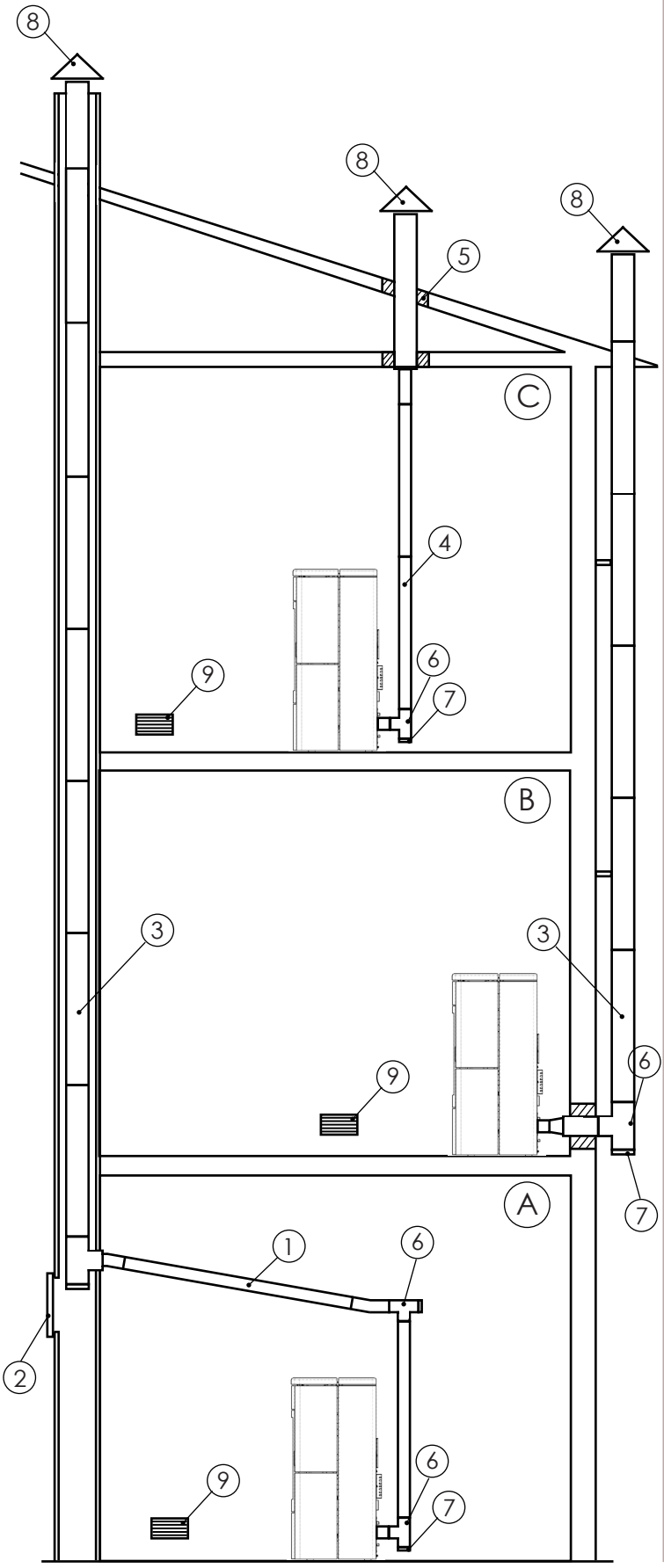


## 3.6 EXAMPLES OF CORRECT INSTALLATION

installation of the product (A) necessary for the horizontal section for connection to an existing chimney flue. Based on a slope of 3-5%, to reduce ash deposit in the horizontal pipe section which must not be over 3m (1). The existing chimney flue must be inspectionable (2).

Installation of the product (B) requires an insulated chimney flue (3) with an internal diameter of no less than 100mm, since all the smoke piping was assembled outside the home.

Installation of the product (C) requires a single wall chimney flue (4) for the section inside the home. Relating to the part placed in the attic, you are advised to install a chimney flue Ø120mm, with perforation for passage of the piping, extended to:

- minimum 100mm around the pipe if in contact with inflammable parts such as cement, bricks, etc.;
- minimum 300mm around the pipe (or as described in the plate data) if in contact with flammable parts such as wood etc.

In both cases, insert adequate insulation (5) between the chimney flue and the attic.
You are advised to check and comply with the plate data of the chimney flue, in particular the safe distances from combustible materials.
The previous rules also apply for holes made on walls.

On the lower part of the chimney flue, for all 3 installations, a "T" fitting (6) was assembled with an inspection plug (7), as well as on the inlet of the chimney flue.

The upper part of the chimney flue, for all 3 installations, has a wind-proof chimney pot (8) assembled.

In the home, for all 3 installations, a grate is planned to guarantee correct oxygenation of the premises where the product is positioned.

Grate not necessary if appliance is hermetically sealed.

It is not recommended to install a 90° curve as an initial section which would quickly cause ash to block smoke passage, causing draught problems in the appliance.

In the event of particular atmospheric conditions and/or hostile draught conditions, the product can overcome these situations provided due installation measures are in place, for example a wind-proof chimney pot.

## 3.7 DOCUMENTATION TO ISSUE

When installation is concluded, the installation technician must deliver to the user:
- the use and maintenance booklet of the appliance supplied by the manufacturer;
- the technical documentation of the accessories used and subject to maintenance;
- the documentation relevant to the evacuation system of combustion products;
- The system booklet (where planned);
- the documentation certifying installation;

The useful documentation for installation liability must include:
- a detailed description (also including photographs) of the presence of other heat generators;
- Declaration of Conformity of the system to standard (M.D. 37/08);
- general description, or diagram or photographic documentation of the changes made to the system, if intervention was necessary during installation;
- Use of certified material with the CE mark (305/2011);
- possible instructions relating to the warranty;
- the date and signature of the installation technician;

NOBIS SRL cannot be held in any way liable in the event of non-compliance with the installation and start-up standards of its products.

## 3.8 UNPACKING THE PRODUCT

Packaging is composed of boxes in recyclable cardboard according to the RESY standards and wooden pallets. All packaging materials can be re-used for similar use or, if necessary, disposed of as urban waste, in compliance with legislation in force.
Remove the strap binding the pallet to the packaging and lift the cardboard; remove the plastic bag around the product, ensuring it is intact.
The body must always be moved in a vertical position using trolleys.
Pay particular attention so that the door and its glass are protected against mechanical impact which would compromise their integrity.
If possible, unpack the product near the area where it will be installed.

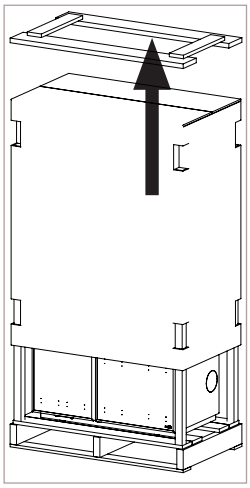

To remove the appliance from the pallet, you can remove the two screws placed under the pallet (13 hex key) to release the appliance from the wooden base.

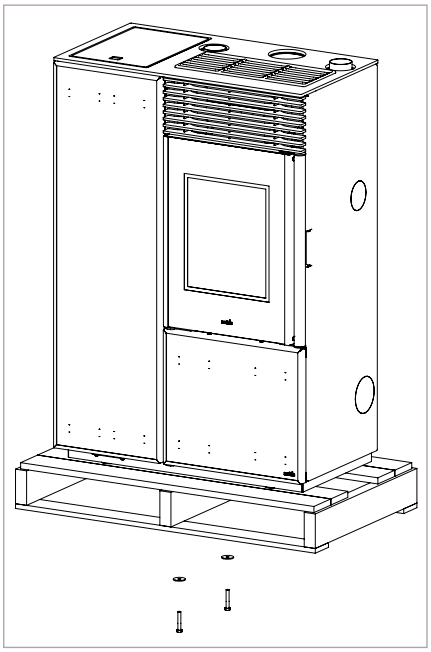

Position the equipment and proceed with its connection to the chimney flue. Find,
using the 4 adjustment feet, the right level so that smoke discharge and the pipe are connected correctly.

## 3.9 SMOKE EXHAUST ASSEMBLY/CANALIZATION

The mounting system for the smoke outlet is shown below(unlike the default version) side / top. Imoreover, always in this chapter, the various combinations are shown to carry out the ducting with scheme for disassembly and reassembly of the appliance.

This chapter deals with installation options different from the standard. Therefore the pipes are optional and can be purchased from your dealer of trust.

The disassembly / reassembly operations of the appliance must be carried out by qualified personnel authorized by Nobis srl.
Remember that the opening of the appliance, carried out by unauthorized personnel, will result in the loss of the product warranty.

DISASSEMBLY OF THE PRODUCT

1

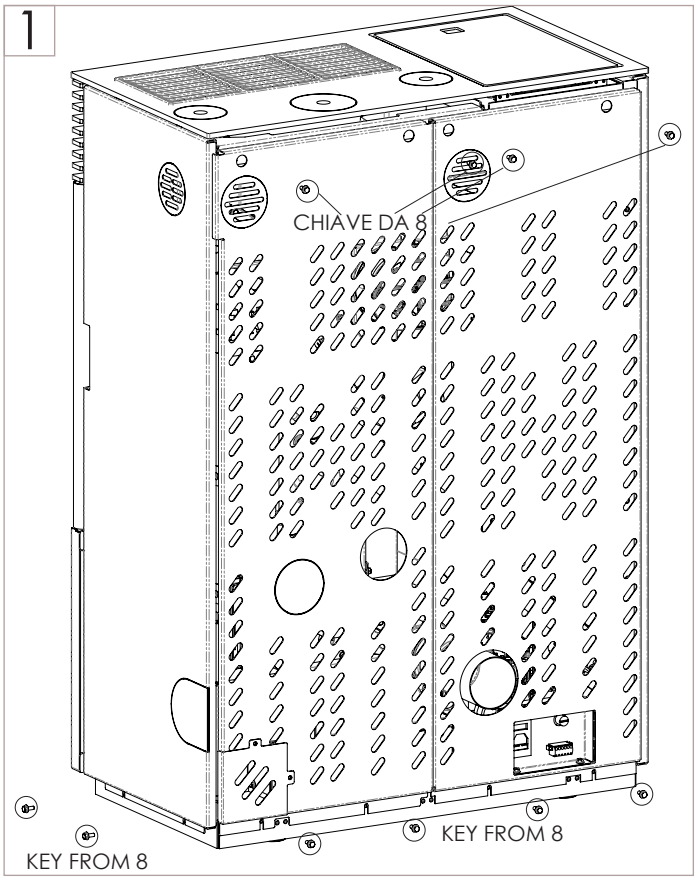


3

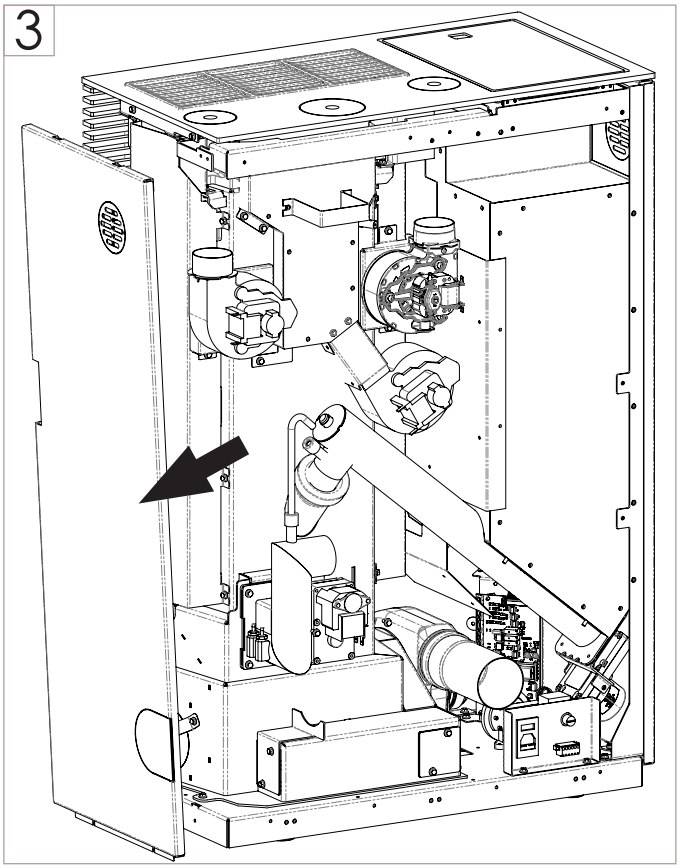

2

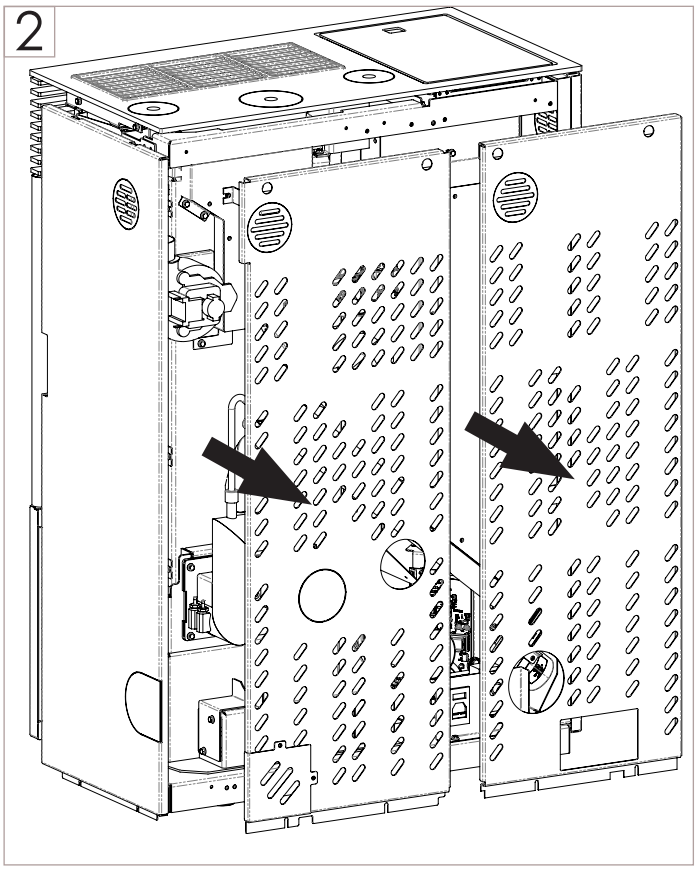

MOUNTING THE SIDE FUME EXHAUST KIT

1

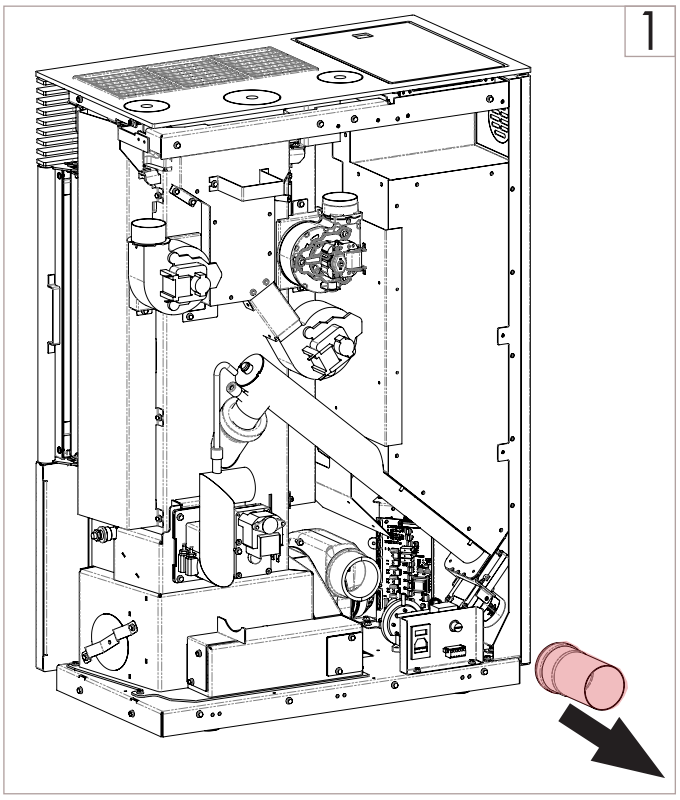

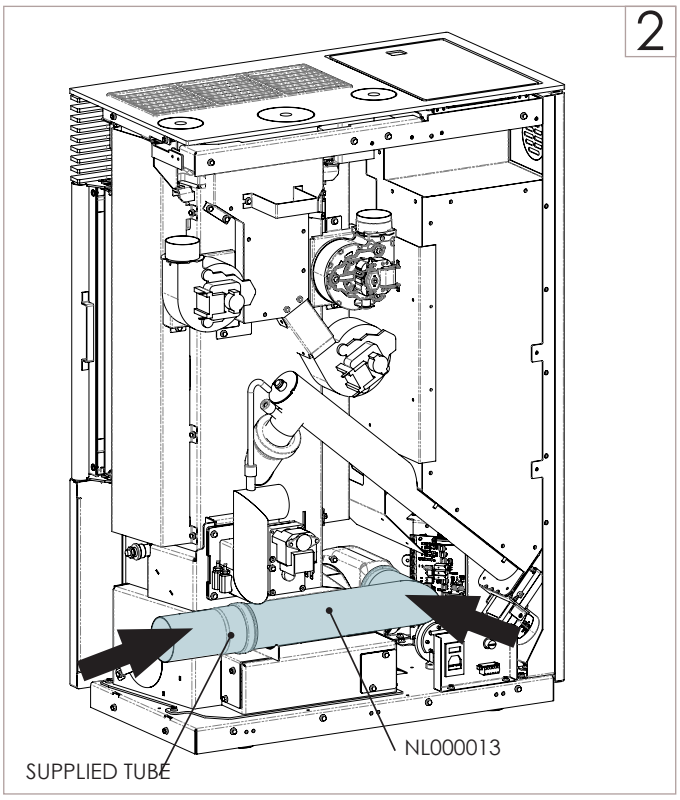


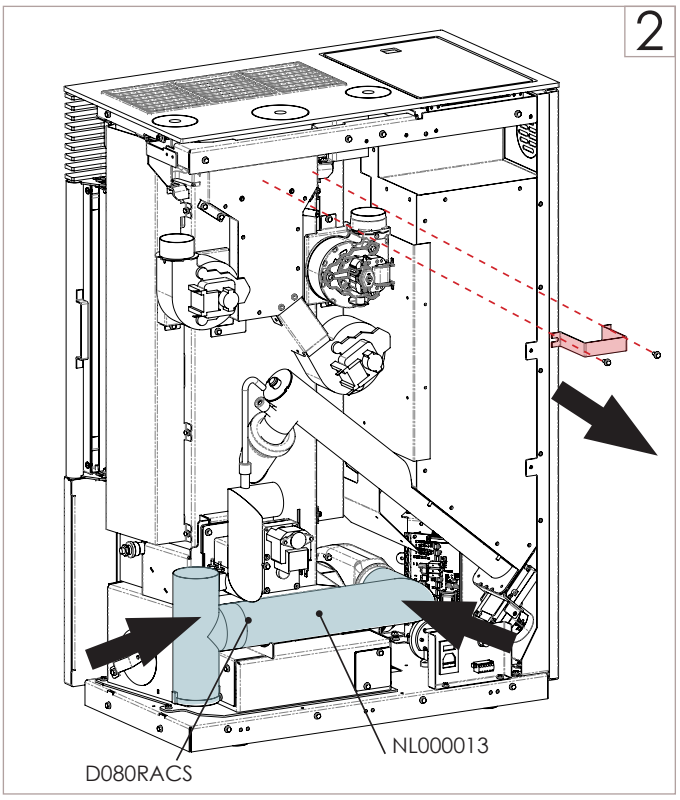


Reassemble the appliance following the same procedure adopted for its disassembly.

MOUNTING THE UPPER FUME EXHAUST KIT (140-009-0001A)

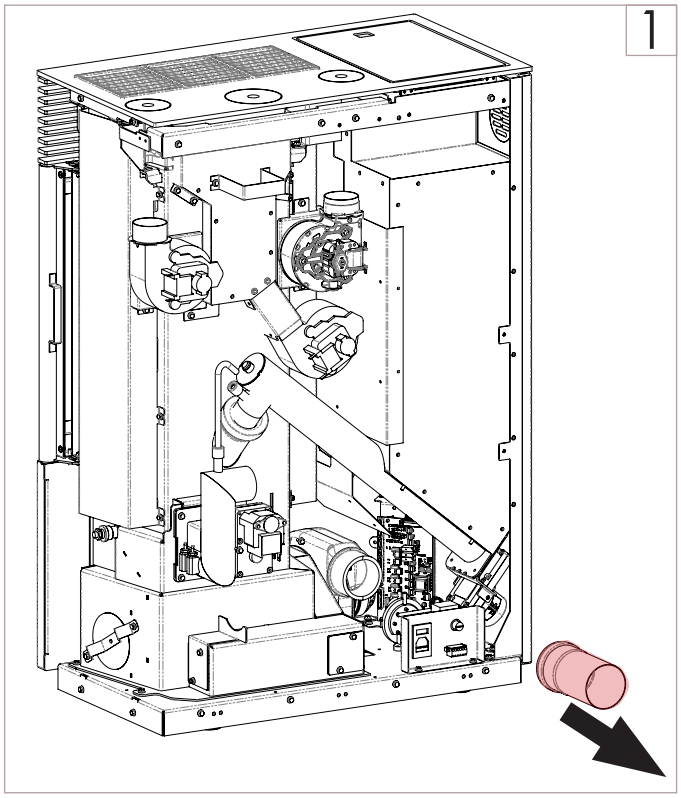


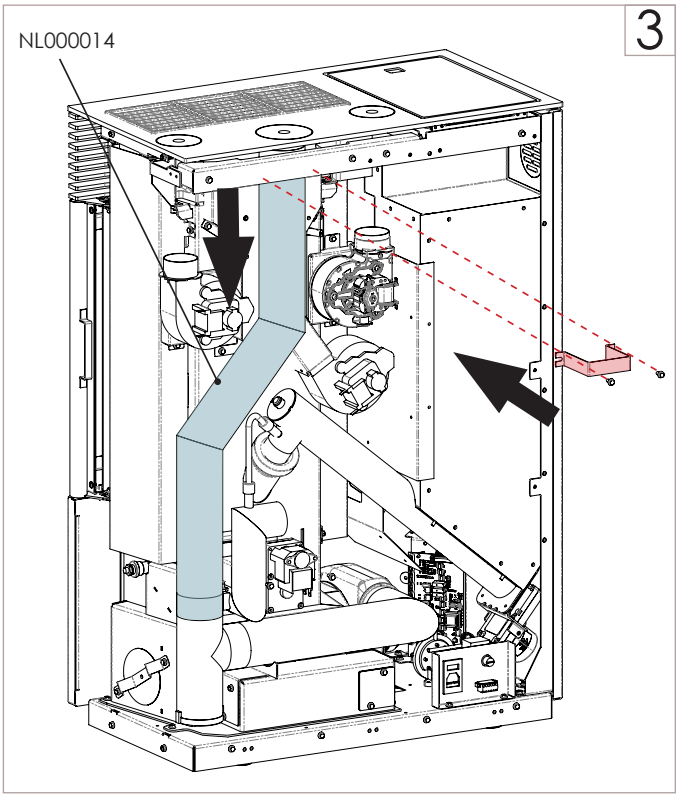

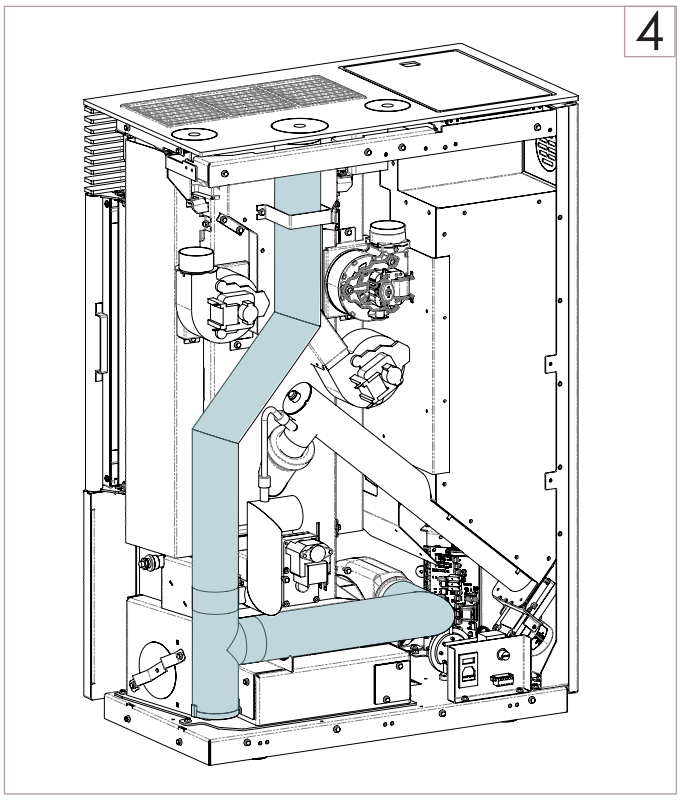


Reassemble the appliance following the same procedure adopted for its disassembly.

MOUNTING OPTIONS FOR CANALIZATION

1 - REAR CANALIZATION:

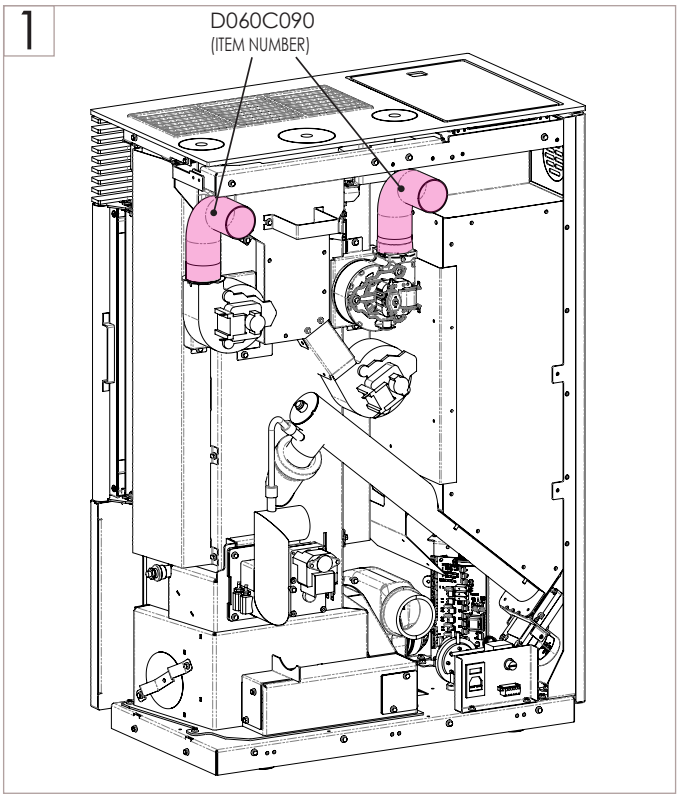


Reassemble the appliance following the same procedure adopted for its disassembly.

2 - UPPER CANALIZATION:

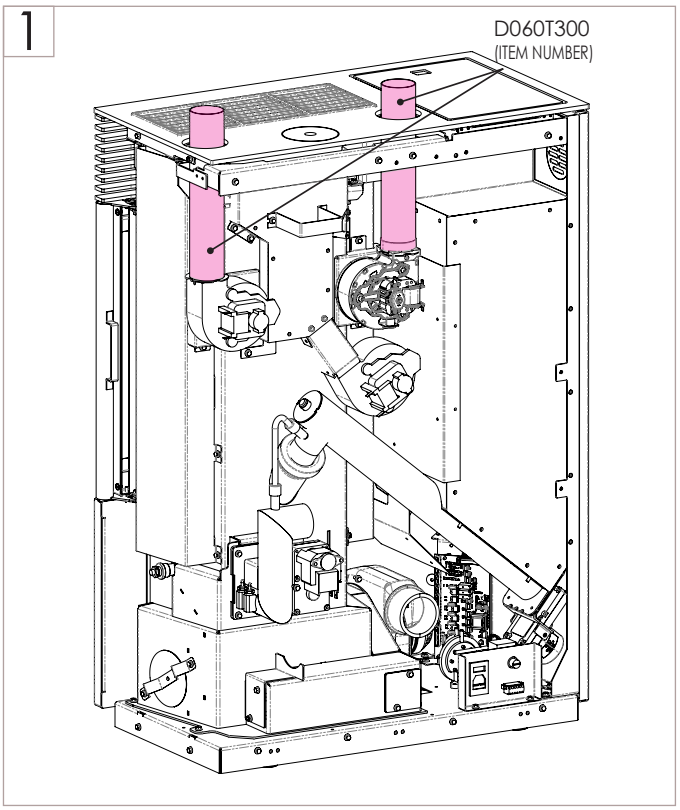


3 - SIDE CANALIZATION:

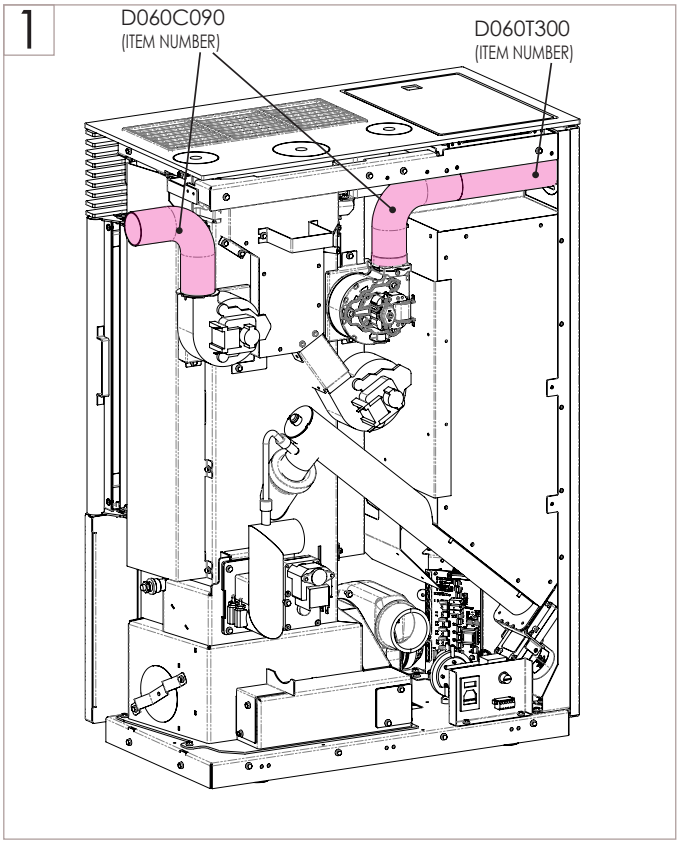

## 3.10 COVERING ASSEMBLY

A10 C LIGHT

Take the hexagon wrench 8 and the 2.5 Allen wrench and open the packaging containing the coating.

**FRONTAL MAJOLICA ASSEMBLY**

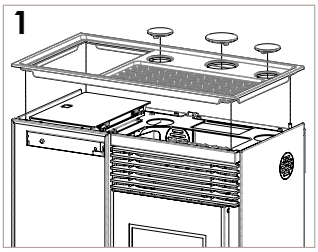


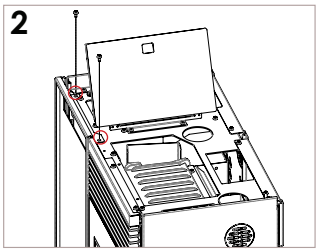


**1** Lift the cast iron top;

**2** Lift the pellet cover and unscrew the 2 screws with a hexagonal wrench size 8.

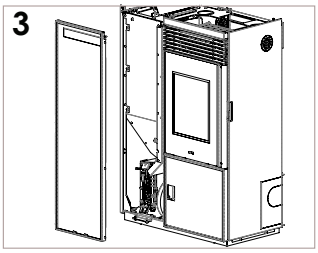


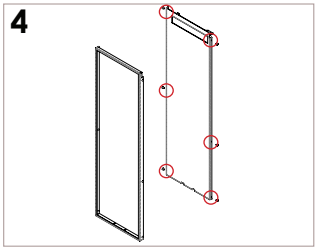


**3** Remove the front panel;

**4** Remove the 6 screws to disassemble the unit with a 2.5 Allen key;

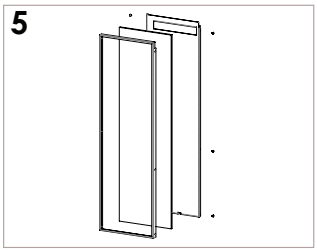


**5** Remove the majolica from the cladding kit, place it in the frame and close the group.

Repeat the operations backwards to mount the front panel on the product.

**LOWER FRONT MAJOLICA ASSEMBLY**

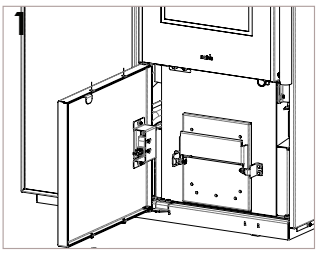


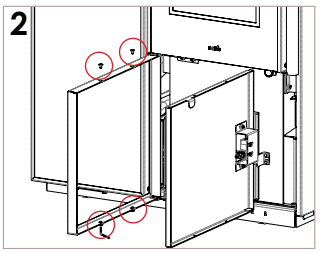


**1** Open the lower door, door for viewing the ash drawer;

**2** Release the structure from the frame by loosening the 4 screws with the 2.5 Allen wrench.

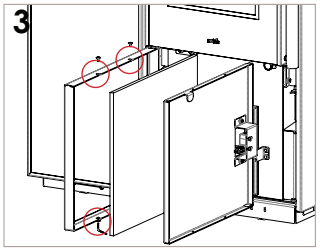


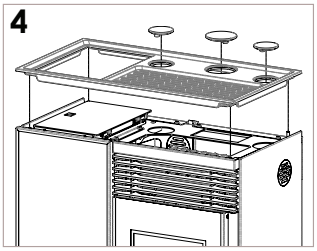


**3** Remove the majolica from the cladding kit, place it in the frame and close the group;

**4** Place the cast iron top.

Once the cast iron top is reassembled, then the final results.

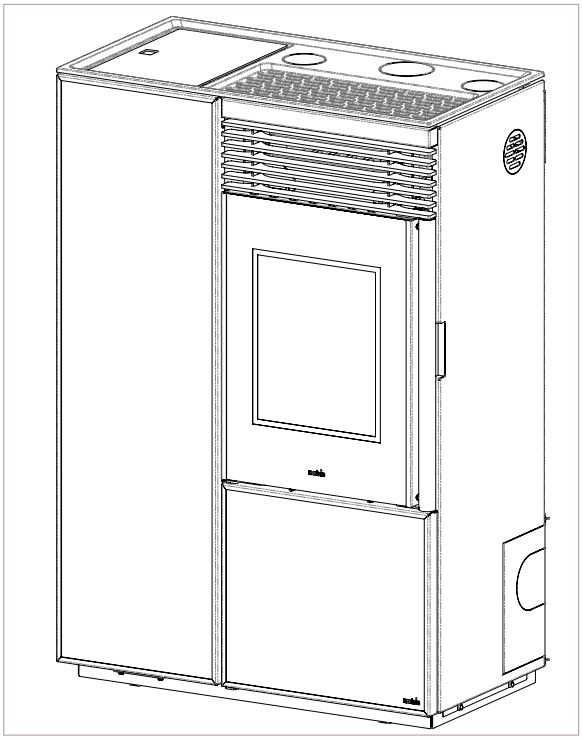

A10 C LIGHT 2020

For all the assembly operations of the coating, pay close attention to the locking of the nuts, to avoid breaking the insert.

Take the hexagon wrench 8 and open the packaging containing the covering.

**UPPER FRONT MAJOLICA ASSEMBLY**

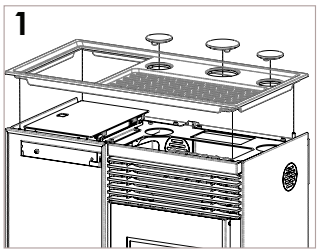


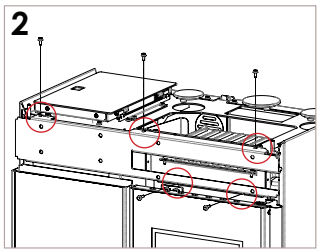


**1** Lift the cast iron top;

**2** Remove the upper front panel with the 8 hex key, using the 5 screws.

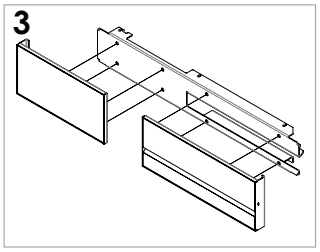


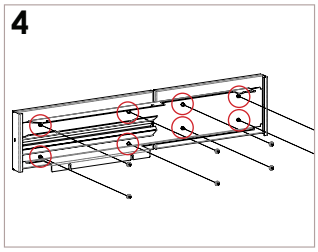


**3** Remove the 2 tiles, shown in the figure, from the cladding kit with the 8 M5 nuts;
**4** Place the majolica tiles one at a time on the external side of the sheet (holding them with your hand) and, using the through male inserts, use the nuts to fix the majolica tiles.

Repeat the operations backwards to mount the top front panel on the product.

**RH LOWER FRONT PANEL ASSEMBLY**

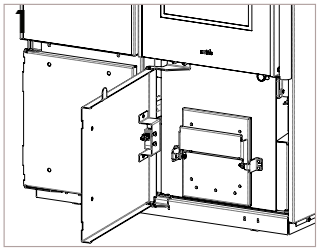


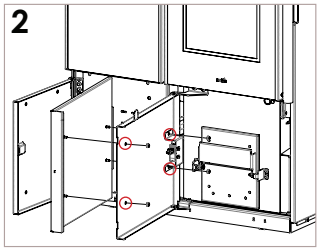


**1** Open the lower right door, door for the view of the ash drawer and remove the majolica, shown in the figure, from the coating kit with the 4 M5 nuts;
**2** Position the majolica on the external side of the sheet (holding it with your hand) and, using the male through inserts, use the nuts to fix the majolica.

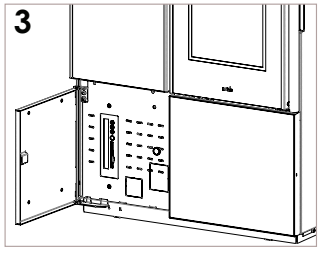


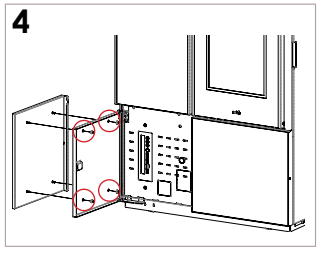


**3** Open the lower left door, door for the view of the electronic control unit and remove the majolica, shown in the figure, from the cladding kit with the 4 M5 nuts;
**4** Position the majolica on the external side of the sheet (holding it with your hand) and, using the male through inserts, use the nuts to fix the majolica.

Once the cast iron top is reassembled, then the final results.

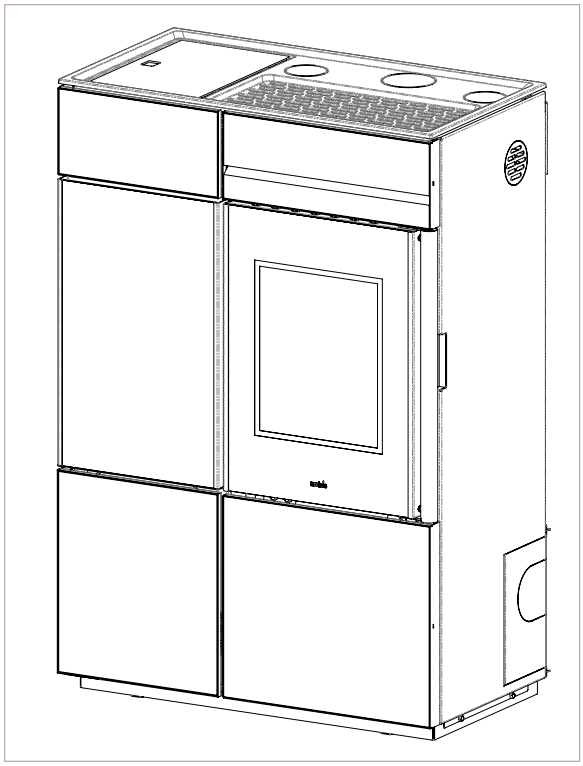

## 3.11 ELECTRICAL CONNECTION

The product power supply cable must only be connected after concluding installation and assembly of the product, it must not be in contact with hot parts and must remain accessible after installation. To carry out electrical connection, proceed as described below:

- connect the power supply cable on the back of the appliance;
- connect the cable plug to the current socket on the wall.

You can connect an outer thermostat with timer to the appliance for its regulation or to switch on and off. For connection and management of the "outer thermostat" function, refer to the specific chapter in the following pages of this manual.

It is compulsory for the system to be grounded and have a differential switch in compliance with legislation in force. Furthermore, ensure the socket is compatible with the type of plug on the power cable used.

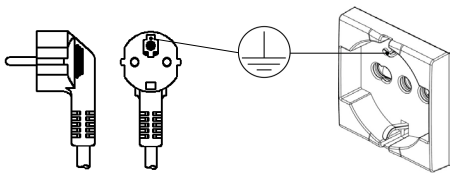

# 4 MAINTENANCE

The maintenance operations, excluding routine cleaning (explained in the relevant paragraph), must be carried out by authorised, technical staff. Remember, before carrying out any maintenance operation, implement the following precautions:

- all parts of the product must be "cold";
- ensure there is no form whatsoever of combustion (for example ash still hot);
- use of safety devices as per the directive;
- remove the plug from the electrical socket;
- having terminated maintenance, reset the product paying attention to re-activate all the safety devices.

## 4.1 SMOKE SYSTEM MAINTENANCE

The chimney flue must always be cleaned, since deposits of soot or fuel residue reduce the section blocking its draught, compromising good operation of the product and, if in large quantities, can catch fire. It is compulsory to have a qualified chimney sweep clean and check the chimney flue and the stack at least once a year or after prolonged stoppage due to non-use of the appliance. At the end of the control/maintenance, ask for a report to be issued stating the system is safe. Lack of cleaning prejudices safety of the system.

## 4.2 PRODUCT MAINTENANCE

Carry out at least once a year or on each "Service Hours" signalling (signal that appears on screen when the working hours have been exceeded, over which excellent product operation is not guaranteed). In this phase, the authorised technician should:

- completely and accurately clean the smoke pipes;
- check the sealing status of all the gaskets;
- remove broken pellet residue inside the pellet tank;
- re-assemble all parts of the appliance;
- check correct operation and good quality combustion

# 5 TECHNICAL DATA OF THE PRODUCT

This chapter issues to the end user all the information relating to the technical data of the product, the dimensions, the installation measurements, the minimum distance to comply with from walls and furniture, sofas, etc.

## 5.1 PRODUCT DATA SHEET

| **SCHEDA PRODOTTO** | | |
|---|---|---|
| ***EU 2015/1186*** | | |
| Brand | **Nobis** | |
| Model | **A10C LIGHT** | **A10C LIGHT 2020** |
| Energy efficiency class | **A++** | **A++** |
| Direct thermal power (Kw) | **9.5** | **9.5** |
| Indirect thermal power (Kw) | **-** | **-** |
| Energy efficiency index | **130** | **130** |
| Useful efficiency (Nominal power %) | **90.9** | **90.9** |
| Useful efficiency (Reduced power %) | **93.2** | **93.2** |
| Comply with the warnings and instructions for installation and periodic maintenance of the instructions manual. | | |

## 5.2 TECHNICAL FEATURES

| Model | **A10C LIGHT** | | **A10C LIGHT 2020** | |
|---|---|---|---|---|
| | **Reduced** | **Nominal** | **Reduced** | **Nominal** |
| Weight of appliance (kg) | **210** | | **210** | |
| Ø air inlet (mm) | **60** | | **60** | |
| Ø smoke outlet pipe (mm) | **80** | | **80** | |
| Vol. max. heating* ($m^3$) | **233** | | **233** | |
| Power introduced *(kW)* | **4.1** | **10.4** | **4.1** | **10.4** |
| Yield introduced *(kW)* | **3.8** | **9.5** | **3.8** | **9.5** |
| Yield *(%)* | **93.2** | **90.9** | **93.2** | **90.9** |
| CO 13% $O_2$ *($mg/m^3$)* | **75** | **8** | **75** | **8** |
| Tank capacity (kg) | **35** | | **35** | |
| Pellet hourly consumption *(kg/h)* | **0.86** | **2.16** | **0.86** | **2.16** |
| Autonomy *(h)* | **40.7** | **16.2** | **40.7** | **16.2** |
| Absorbed electrical power (W) | **315** | | **315** | |
| Electrical power supply (V-Hz) | **230-50** | | **230-50** | |
| Discharge gas flow *(g/s)* | **4.3** | **7.1** | **4.3** | **7.1** |
| Minimum draught *(Pa)* | **9** | **11** | **9** | **11** |
| Smoke temperature *(°C)* | **101** | **168** | **101** | **168** |

* this value can vary based on the type of energy class of the home and the type of pellet used.

The data outlined are approximate and non-binding and can vary based on the type of pellet used. The manufacturer reserves the right to make changes for the purpose of improving product performance.

## 5.3 DIMENSIONS

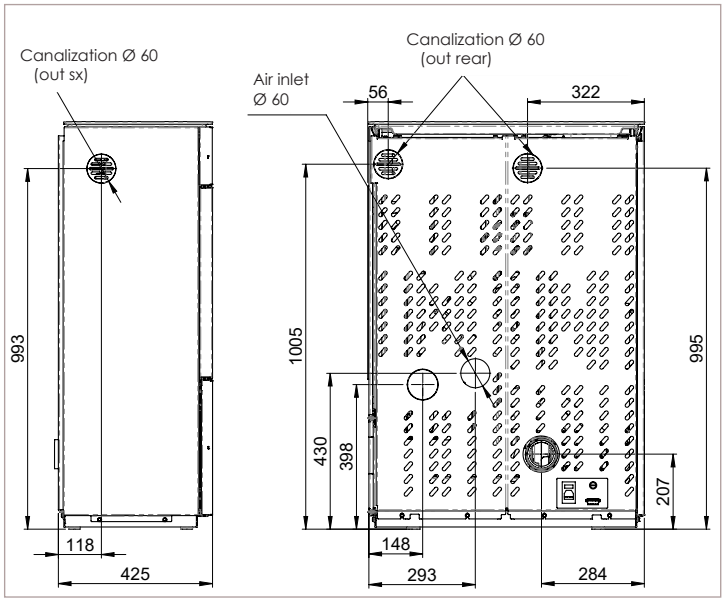


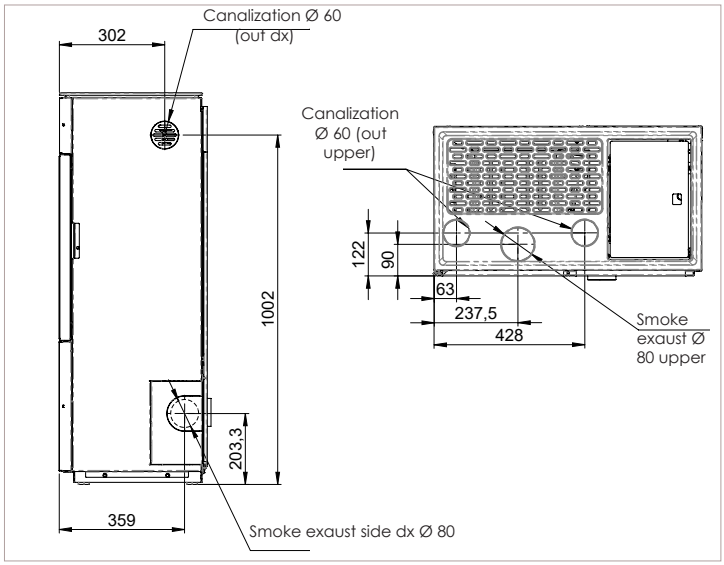


## 5.4 SAFE DISTANCES

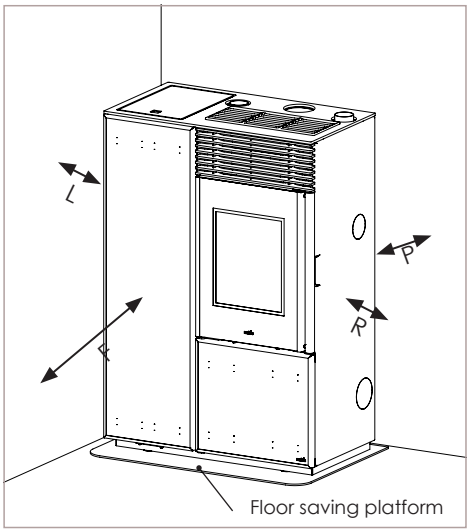


| Minimum distance from flammable materials | | |
|---|---|---|
| R | Right hand side | 150 mm |
| L | Left hand side | 150 mm |
| P | Rear | 100 mm |
| F | Front | 800 mm |

# 6 PRODUCT CONFIGURATION

Once all the installation, covering assembly (where present as a kit) and electrical connection are in place, with utmost attention, access the rear part of the product to power it.

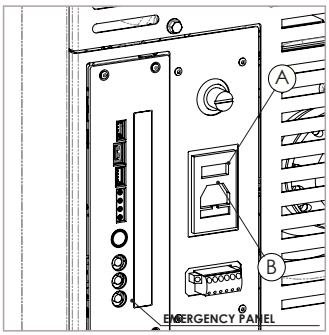


The "I/O" Ⓐ switch in the figure above must be positioned on "I". In the event of a power failure, check the condition of the fuse placed under the switch Ⓑ (4A fuse *EU configuration*). During periods of non-use, you are advised to disconnect the cable powering the appliance, and also the batteries from the handheld device.

## 6.1 CONFIGURATION OF HANDHELD DEVICE

Remove the protective cover of the batteries on the rear of the remote control, as in the figure Ⓐ , and insert 3 batteries (type AAA Alkaline 1.5V) in the handheld device compartment, paying attention to polarity. Close the protective cover of the batteries as in the figure Ⓑ.

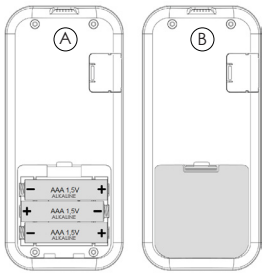


**CAUTION**
Risk of explosion if battery is replaced with the wrong type.

The batteries, once exhausted, must be disposed of in the dedicated collection centers.
To protect the battery from adverse conditions or misuse, remember to:
- keep the command away from heat sources, risk of explosion;
- remove the batteries in case of prolonged not use of command, risk of oxidation and liquid leakage;

Nobis srl declares that the type of "Handheld" radio device complies with Directive 2014/53 / EU.
The full text of the EU declaration of conformity is available at the following Internet address:
*https://www.nobisfire.it/wp-content/uploads/2019/04/DoC-Palmare-Radio-Nobis-1.pdf*

The handheld device, after a first short screen with the manufacturer's logo, lists a series of languages available on the menu.

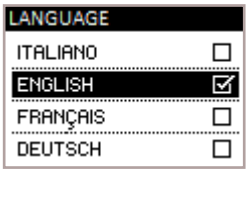

Select the language, using the keys ↑↓ that you want to use as the display standard. Press the key OK to confirm and go to the next screen.

To work correctly, the handheld device requires interfacing with the electronic board inside the product. For this reason, the display shows a first installation message.

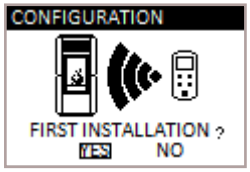


If first use of the handheld device, choose **YES** with the selection keys ↑↓ .Press the key OK to confirm and go to the next screen.

Follow the guide instructions to link via remote the appliance to the display, as outlined in the figure below.

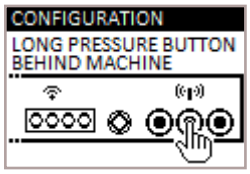


Keep the remote communication key of the electronic board pressed for a few seconds, placed on the rear of the product, to start the unit search procedure.

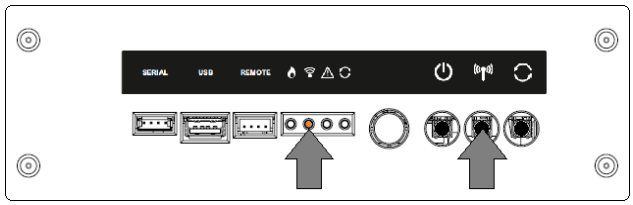


The yellow, flashing led, under the icon indicates the electronic board is waiting to receive the handheld device signal.

Pressing the confirm key OK on the handheld device, the components can communicate with one another.
A tick sign on the display, accompanied by an acoustic signal, indicates the remote connection operation has successfully concluded.

If the batteries are replaced, you don't necessarily have to follow the initialisation procedure of the handheld device. In this case, when the display shows the message "FIRST INSTALLATION?", select **NO** and press the confirm OK key.

## 6.2 CONFIGURATION OF T.EXT THERMOSTAT

If you want to manage the appliance from a different room (in that specific room, the remote handheld device cannot communicate), you can connect an external thermostat to the product, to allow modulation of combustion or, by activating a particular function, allow switch on or off of the product. As in the figure below, connect the terminals of the thermostat to the terminal board on the back of the product (near the emergency panel).

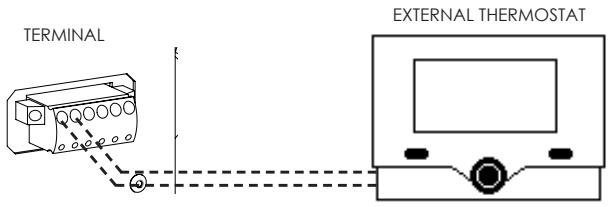


Following electrical connection, to allow the control unit to recognise the presence of the t.ext, the recognition function must be enabled from the SETTINGS menu (see the "ENABLE EXTERNAL THERMOSTAT" paragraph)

By enabling the function that allows external thermostat enabling, on the handheld device reading and management of the ambient temperature are inhibited. The handheld device displays TON if required, TOFF if the temperature set on T.ext is reached.

## 6.3 PELLET LOADING

Fuel is loaded by inserting pellets from the upper part of the product, opening the door. Ensure the content of the bag of pellets does not fall around the edges of the tank,
paying particular attention to centring,
during the loading phase. Also avoid the pellet packaging coming in contact with hot surfaces.

Ensure you correctly close the cover of the tank again after loading the pellets. Closure is controlled by an electronic contact (for the models where planned). In the event of non-closure, a sign warns the user to pay attention to tightening, before passing to alarm mode, in the event the warning is ignored.

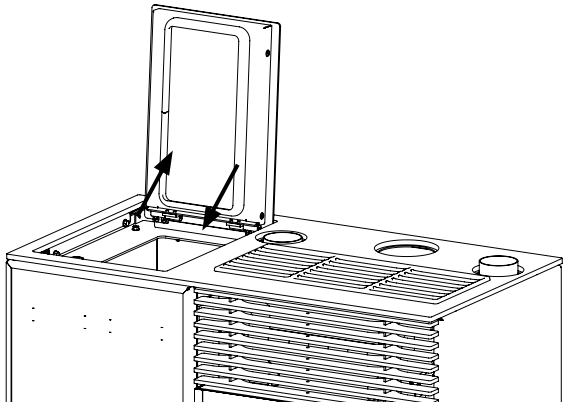

# 7 DESCRIPTION OF REMOTE CONTROL

Before switching on the appliance, you are advised to read the following chapter carefully relating to use of the receiver and the handheld device, as well as their related functions.
INFORMATIVE NOTE:
• frequency bands and transmitted power used by the equipment as reported in technical documentation: 868.3MHz - 869.85MHz
• frequency bands and respective power limits transmitted applicable to the device (frequencies and standardized powers): 6dBm ERP

## 7.1 DESCRIPTION OF RECEIVER

The appliance is equipped with an emergency remote board, placed at the back of it, which allows basic management of the functions in the event the handheld device is faulty or not working properly.

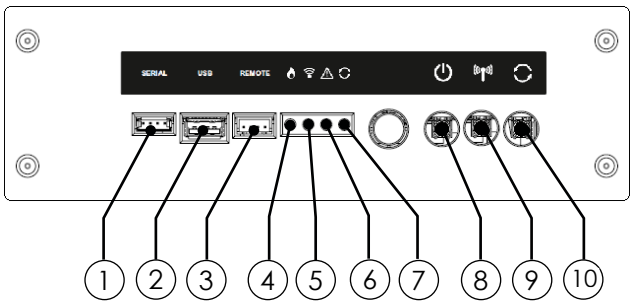


| | |
|---|---|
| 1 | Serial connection (use by authorised staff ONLY) |
| 2 | USB connection (use by authorised staff ONLY) |
| 3 | Emergency cable connection |
| 4 | GREEN LED - appliance working status |
| 5 | YELLOW LED - remote communication in progress |
| 6 | RED LED - alarm on |
| 7 | BLUE LED - System updating in progress |
| 8 | Appliance switch on/off button |
| 9 | Receiver handheld device remote combination button |
| 10 | Manual upgrade button (use by authorised staff ONLY) |

In the event of malfunctioning of the remote communication between the handheld device and the receiver, or if the batteries are flat, use the **emergency cable**supplied, to restore communication between the remote devices.

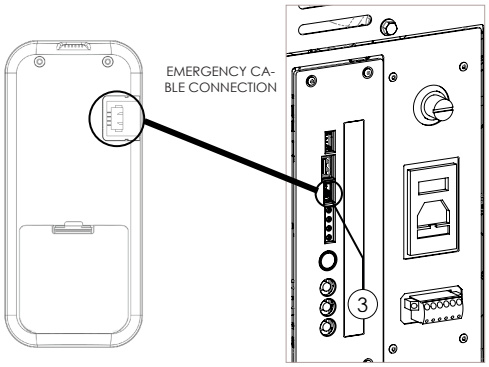


Before connection using the emergency cable, remove the batteries from the handheld device from the specific compartment. DANGER OF FIRE

## 7.2 DESCRIPTION OF HANDHELD DEVICE KEYS

The handheld device is presented as in the image below:

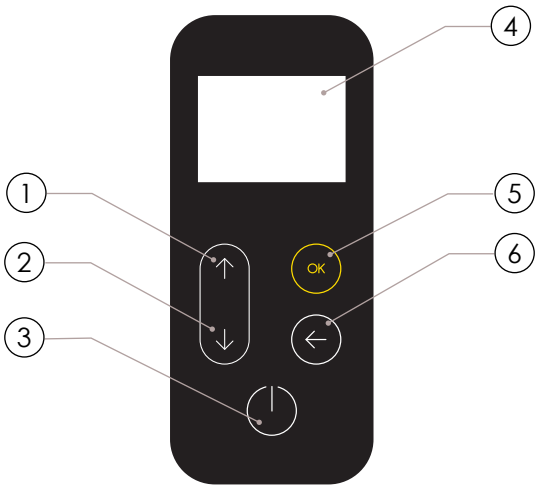


| | |
|---|---|
| 1 | Increase key (selection key) |
| 2 | Decrease key (selection key) |
| 3 | ON/OFF or reset from "Sleep" mode key |
| 4 | Display |
| 5 | MENU access and confirm key |
| 6 | Back to previous screen key |

In "Sleep" mode, the screen of the handheld device is blacked out, only maintaining enabled, if necessary, the remote communication with the appliance, to reduce battery consumption.

## 7.3 DESCRIPTION OF THE HANDHELD DEVICE DISPLAY

The handheld device display is as follows:

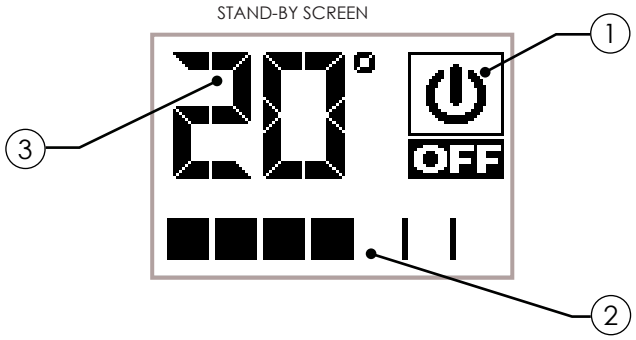


After 20 seconds of inactivity, the display on the handheld device blacks out and passes to "SLEEP" mode, maintaining the remote connection with the appliance. The display re-enables only by pressing the ⏻ key.

① Icon indicating the status of the appliance (see "Concise icons diagram").

② Indicates the work power set. Furthermore, by pressing the scroll key ⓓ, it allows the power setting to be displayed, which can be edited using the two scroll keys ⓤ ⓓ.
Confirmation of each variation takes place automatically within 3 seconds of editing the data, or by pressing the confirm ⓞⓚ key. An acoustic signal confirms the change
was made.

③ Displays the ambient temperature detected by the handheld device. Furthermore, pressing the scroll key ⓤ allows display of the temperature setting, which can be edited using the two scroll keys ⓓ ⓤ.
Confirmation of each variation takes place automatically within 3 seconds of editing the data, or by pressing the confirm key ⓞⓚ. An acoustic signal confirms the change
was made.

## 7.4 FLAT BATTERIES SIGNAL

If batteries are flat, the display presents a symbol which indicates their limit status,
however maintaining the functions enabled of the handhelddevice.

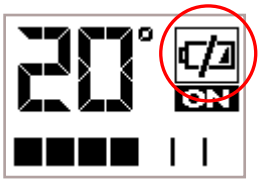


As soon as the level of the batteries does not allow any remote communication, the handheld device displays, on the full screen, the image of the flat battery, blocking all the functions connected to it until the batteries are replaced.

## 7.5 ICONS CONCISE DIAGRAM

| ① | ② | ③ | MEANING |
|---|---|---|---|
| ON | | | SWITCH ON |
| ON | | | WORK |
| ON | | MAN | WORK WITHOUT TEMPERATURE CONTROL |
| RIS | | | SAVING |
| ON | AUTO | | AUTO WORK (see specific paragraph) |
| ON | POWERFUL | | POWERFUL WORK (see specific paragraph) |
| ON | | | OPTIMISED WORK (see specific paragraph) |
| ON | | | BRAZIER CLEANING (where present) |
| ON | | | CLEANER ON (cleaning to empty brazier) |
| ECO | | | AIR CON. COMFORT ON |
| ON | | | RESTART FROM AIR CON. COMFORT |
| OFF | | | FINAL CLEANING |
| OFF | | | OFF |
| OFF | | | SIGNAL WARNING (see specific paragraph) |
| ON | | | FLAME TEMPERATURE OVER LIMIT |
| ON | | | EXCESS PELLET LOADING |
| RIS | | | PRESSURE SENSOR FAULT |
| RIS | | | FLAM READING PROBE FAULTY |
| ON | | | HANDHELD BATTERIES ALMOST FLAT |
| ON | | | REACHED LIMIT SERVICE HOURS |

## 8 MENU BROWSING

To access the menu, press the key (OK) on the stand-by screen to display the selection items, as in the figure.

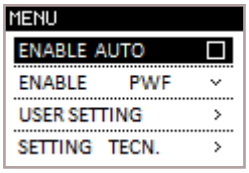


Scroll the menu items using the keys (↑) (↓)

Confirm the selection with the key (OK)

To return to the previous item, key (←)

A practical example follows of how to execute navigation using all the selection keys.

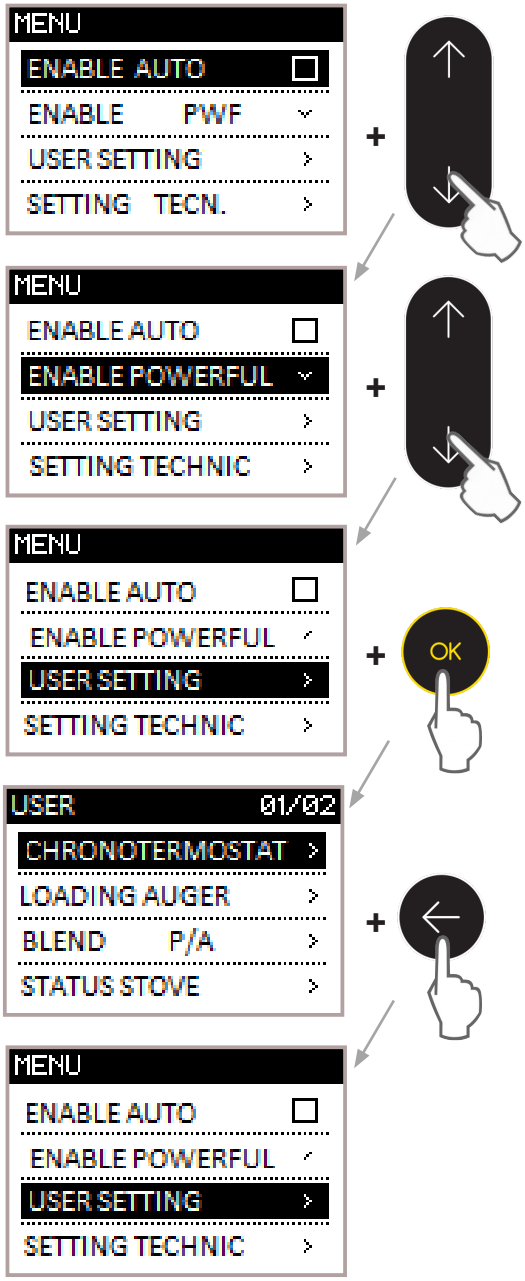


## 9 FIRST START-UP INSTRUCTIONS

This chapter highlights a series of operations to carry out during the first start-up phase of the appliance.

### 9.1 DATE AND TIME SETTING

The procedure follows to set the date and time, useful for the thermostat with timer function, on the models of the manufacturer's range.

OPERATING PROCEDURE:

*MENU >> SET USER >> SETTINGS >> TIME - DATE*

Access the menu by pressing key (OK)

Scroll the items to SET USER with the key (↓)

Access the menu by pressing key (OK)

Scroll the items to SETTINGS with the key (↓)

Access the menu by pressing key (OK)

Scroll the items to TIME-DATE with the key (↓)

On the TIME - DATE menu item, key (OK)

The screen appears to adjust the time and calendar as in the figure below.

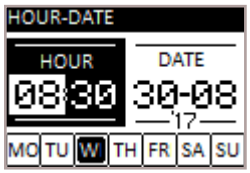


Edit the data highlighted using the keys (↑) (↓)

Confirm the data changed using the key (OK)

Repeat the operation to complete the settings.

During editing, remember that:
- to return to the previous data, without saving the last data changed, press the key (←)
- if you intend changing a single datum, having terminated the change, press the key (OK) multiple times until you exit the function described in the paragraph.

To return to the STAND-BY screen, use the key (←), repeating the operation multiple times.

### 9.2 AMBIENT PROBE CALIBRATION (HANDHELD DEVICE)

The procedure follows to calibrate the handheld device probe, if the value should differ from reading a reference sample thermostat.

OPERATING PROCEDURE:

*MENU >> SET USER >> SETTINGS >> CAL. AMB.P.*

Access the menu by pressing key (OK)

Scroll the items to SET USER with the key (↓)

Access the menu by pressing key (OK)

Scroll the items to SETTINGS with the key ⓓ

Access the menu by pressing key OK

Scroll the items to CAL. P.AMBIENT, key ⓓ

On the CAL. P.AMBIENT menu item, key OK

The screen appears to adjust the ambient probe, as in the figure below.

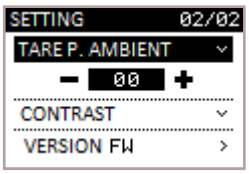


Edit the data highlighted using the keys ⓤ ⓓ

*Example: Reference thermostat displays 21°C and handheld device displays 19°C.*
*Set +2 for the handheld device to display the value 21°C.*

Confirm the data changed using the key OK

To return to the STAND-BY screen, use the key ⓛ, repeating the operation multiple times.

## 9.3 USER / AUTO MANAGEMENT

The logic, relating to this type of management, is as follows:

USER: the user reserves the right to set the ambient temperature he or she wants and the power to the fireplace useful to reach this temperature.

AUTO: the user simply sets the ambient temperature he or she wants for best comfort, the appliance manages the power to the fireplace and ventilation (if present and enabled) autonomously.

OPERATING PROCEDURE:

*MENU >> ENABLE AUTO*

Access the menu by pressing key OK

The first item on the menu, ENABLE AUTO.

Tick using the key OK if you intend managing the appliance in AUTO mode ①.

Do not tick if you want to work in USER mode ② .

① ②

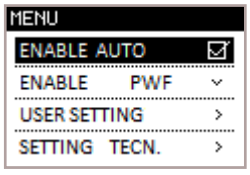


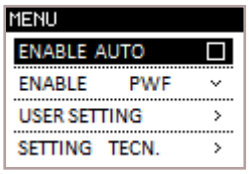


This setting inhibits manual management of the optional fan, with the exception of the fan setting on OFF. In this case, the appliance autonomously only manages power to the fireplace. Ventilation remains disabled.

## 9.4 AMBIENT TEMPERATURE SETTING

The ambient temperature defines the temperature you want to obtain in the premises where the product is installed.

From the STAND-BY screen, key ⓤ to select the value;

The values vary from 7°C to MAN (with the MAN value it is intended that, once set, the appliance NEVER goes to power save).

Edit the value with the keys ⓤ ⓓ

Confirm the new setting with the key OK or wait 3 seconds for auto-confirm.

## 9.5 FIREPLACE POWER SETTING

The fireplace power defines the quantity of heat produced by the appliance, this implies a different fuel consumption. Basically, it is used to speed up the useful time to reach the ideal temperature, set for the premises where the product is installed.

From the STAND-BY screen, key ⓓ to select the power;

The values vary from 1 to 7;

Edit the value with the keys ⓤ ⓓ

Confirm the new setting with the key OK or wait 3 seconds for auto-confirm.

## 9.6 SWITCHING ON/OFF THE PRODUCT

To switch on the product, prolonged press the key ⏻ until the following screen appears, followed by an acoustic signal.

This screen remains on for the following machine statuses;

**SWITCH ON** • Initial phase of pellet loading;
**WAITING FLAME** • Flame development waiting phase;
**FLAME PHASE** • Stabilisation phase of flame and oxidiser inside the brazier;

The appearance is highlighted of the "flame" symbol with the writing ON, without displaying the work power.
Prolonged pressing of the key ⏻ accompanied by acoustic signalling causes switching off of the product, as well as resetting of any alarms.

For models with an automatic cleaner, during the switch on phase, the product activates a brazier cleaning phase before passing to SWITCH ON.
In the event of FAILED IGNITION, after pressing the button, a POP UP signals the need to suck the pellet from the brazier before turning the appliance back on, thus avoiding discharge of unburned pellets into the ash drawer.

Always vacuum the brazier using an ash cleaner, risk of fire.

During first start-up of the product, unpleasant odours may occur or smoke caused by evaporation or drying of certain materials used. This phenomena disappears after some hours of use. During this period, you are advised to keep the premises well ventilated.

# 10 THE WORKING PHASE

The products in the range include a working phase with 7 operating power levels. The behaviour of the appliance is described below once the setting, if set, is reached of the ambient temperature.

## 10.1 SAVING MODE

During the work phase, the appliance works with the objective of reaching the ambient temperature set; when this condition is met, power is reduced to SAVING mode, the phase in which fuel consumption is minimal.
At this point, you must execute a series of precisions to benefit the AUTO function, to pass to saving and/or return to fully operational mode:

- Ventilation, if present and enabled, works in different operational modes based on the existing discrepancy between the setting and the temperature in the premises.
- The appliance gradually increases the power to the fireplace, as soon as the temperature in the premises goes under the required setting (optimisation of combustion and acoustic comfort).

Screen in SAVING mode:

## 10.2 AIR CON. COMFORT FUNCTION

As described in the "saving mode" paragraph, the appliance has the objective of meeting the comfortable heating requirements of the user. The function which can be enabled, linked to his mode, also ensures, if the home has a good energy class, a fuel saving through intelligent switch off of the product (reaching or required of the desired setting).
The procedure follows to enable the function, the change of values with relevant meaning, a practical example of setting.

OPERATING PROCEDURE:

*MENU >> SET USER >> AIR CON. COMFORT*

Access the menu by pressing key OK

Scroll the items to SET USER with the key ↓

Access the menu by pressing key OK

Scroll the items to AIR CON. COMFORT, key ↓

On the AIR CON. COMFORT menu item, key OK

The screen appears with activation of the function and adjustment of the setting parameters, as in the figure.

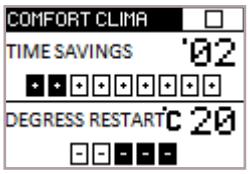


Enable/disable the function with the key OK to display the addition or bypassing of the tick and:

- Return to SETUSER with the key ← .

OR

- Pass, using the key ↓, to the choice of time in saving mode, before the function switches off the product.

Edit the value with the keys ↑ ↓

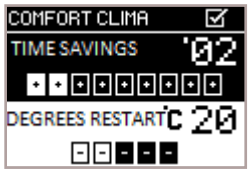


Confirm the data with the key OK and go to temperature setting, under which the product must switch on.

Edit the value with the keys

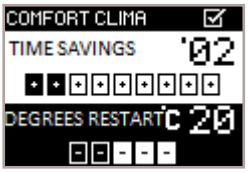


Confirm the data changed using the key OK and return to the SET USER screen.
In saving mode, when changing the time and restart degrees, remember that:

- to return to the previous data, without saving the last data changed, press the key
- if you intend changing a single datum, having ter minated the change, press the key OK multiple times until you exit the function described in the paragraph.

To return to the STAND-BY screen, use the key , repeating the operation multiple times.
STATUS SCREEN.
To recognise switch off of the appliance in AIR CON. COMFORT condition, the screen 1 must be displayed.

To recognise the appliance is about to switch on in the AIR CON. COMFORT condition, the screen 2 must be displayed.

1

2

PRACTICAL EXAMPLE:
Ambient setting at 21°C;
Saving mode setting at 3 minutes;
Restart °C setting at -2°C compared to setting.
The appliance switches off as soon as the temperature in the home reaches the value set + 3 minutes in saving mode.
The product switches on when a temperature is detected of 18°C (21°C - 2°C - 0.5°C tolerance).
You can also activate the function using an external thermostat, taking into consideration that this does not include the hysteresis values.

You are advised to use an external thermostat with its hysteresis value settable up to a maximum of 3°C. Operation of the appliance could start the switch on and off phase many times during the day;
this could compromise the duration of switch on resistance.

## 10.3 POWERFUL FUNCTION

The function described in the paragraph, once activated, allows heating of the ambient, taking advantage of the maximum speed of the fan.
The scope is to supply the maximum heat to the detriment of a minor acoustic comfort.
In this respect, the possibility exists of adjusting the time slot for operation of the POWERFUL function.

With the POWERFUL function enabled and ventilation disabled (for models that include the optional ventilation), the fan activates autonomously at maximum speed for the activity time of the function.

The logic, relating to this type of management, is as follows:

USER: the user reserves the right to set the ambient temperature he or she wants and the power to the fireplace useful to reach this temperature.

POWERFUL: the end user manually activates the function or using the settable time slot. The appliance is released from the power set, also forcing ventilation at the maximum speed, for 5 minutes or up to when the setting is reached, or if the time slot or the user disables the function.

OPERATING PROCEDURE 1:

*MENU >> ENABLE POWERFUL*

Access the menu by pressing key OK

Scroll the items to ENABLE POWERFUL, key

Pressing the key OK , the POWERFUL screen appears with the type of setting you want to activate.

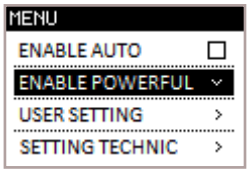


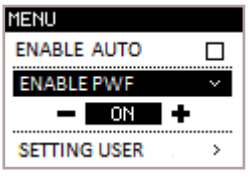


Edit the type of activation with the keys
OFF - Powerful disabled;
ON - Powerful enabled;
TIMER - Powerful enabled with time slot.

As previously described, you can set a time slot to enable the function. Below, the operating procedure is displayed to access and edit the data.

OPERATING PROCEDURE 2:

*MENU >> SET USER >> SETTINGS >> POWERFUL*

Access the menu by pressing key (OK)

Scroll the items to SET USER, key (↓)

Access the menu by pressing key (OK)

Scroll the items to SETTINGS with the key (↓)

Access the menu by pressing key (OK)

Scroll the items to POWERFUL with the key (↓)

On the POWERFUL menu item, key (OK)

The screen appears with adjustment of the setting parameters, as in the figure below.

Edit the switch on and switch off times, as well as enabling the days of the week, keys (↑)(↓)

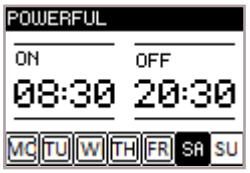


Confirm each data change using the key (OK) until you exit the SETTINGS screen.

During editing, remember that:
- to return to the previous data, without saving the last data changed, press the key (←)
- if you intend changing a single datum, having ter minated the change, press the key (OK) multiple times until you exit the function described in the paragraph.

To return to the STAND-BY screen, use the key (←), repeating the operation multiple times.

If the time slot is set with the POWERFUL function, the data setting in "Enable Powerful" must be "TIMER". If the value is set to "ON", the time slot is inhibited up to its disabling (OFF).

The POWERFUL function, if both the time slot and the manual tick are enabled, inhibits AUTO management up to its disabling.

## 10.4 VENTILATION MANAGEMENT (if optional)

The products of the range with optional ventilation, taking advantage of the natural convection system which guarantees a considerable amount of heat in the ambient, in total absence of noise. However, the possibility exists, by accessing the menu outlined below, to enable optional ventilation according to the desired power.

OPERATING PROCEDURE:

*MENU >> SET USER >> VENTILATION*

Access the menu by pressing key (OK)

Scroll the items to SET USER with the key (↓)

Access the menu by pressing key (OK)

First item in the "VENTILATION" menu, key (OK)

The screen appears with adjustment of ventilation as in the figure below.

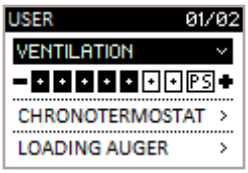


Edit the ventilation power, keys (↑)(↓)
0 - ventilation disabled;
1-7 - ventilation setting range;
PS - ventilation follows power to the fireplace set on the appliance.

If the PS function is not set, the fan is always restricted by the power of the product.

Confirm with key (OK)

To return to the STAND-BY screen, use the key (←), repeating the operation multiple times.

# 11 DESCRIPTION OF THE MENU FUNCTIONS

This chapter describes the user menu functions, useful to improve some comfort related aspects of the user and/or operation of the product.

## 11.1 THERMOSTAT WITH TIMER FUNCTION

With the Thermostat with timer function, you can: program for each day of the week automatic switch on and off of the product, with 4 independent time intervals (PROGRAM 1 - 2 - 3 - 4).
The steps are outlined below to follow, starting with the STAND-BY screen, to access the relevant menu.

OPERATING PROCEDURE:

*MENU >> SET USER >> THERMOSTAT TIMER*

Access the menu by pressing key OK

Scroll the items to SET USER, key ↓

Access the menu by pressing key OK

Scroll the items to THERMOSTAT TIMER, key ↓

Access the function with the key OK

The screen appears with activation of the function and the possibility of selecting 4 TIMED setting programs, as in the figure.

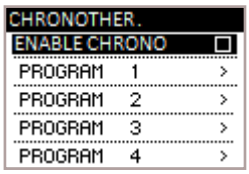


Enable/disable the function with the key OK to display the addition or bypassing of the tick and:

- Return to SETUSER with the key ←.

OR

- Pass, using the key ↓, to the choice of program to set, before accessing with the key OK to change it.

If you want to access 1 of the 4 programs, the screen presented is as follows:

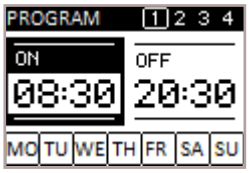


Edit the switch on and switch off times, as well as enabling the days of the week, keys ↑ ↓
Confirm each data change using the key OK and pass to the second screen of the TIMER program.
The screen, in the figure below, displays the possibility of setting the power to the fireplace during activation of the time slot and the temperature you want to obtain in the ambient (1).
Furthermore, you can manage the ventilation speed (if optional) you want to have at a given power (2).

(1)

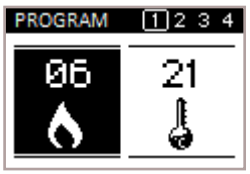


(2)

Edit the values using the keys ↑ ↓

Confirm each data change using the key OK until you exit the program.

During editing, remember that:

- to return to the previous data, without saving the last data changed, press the key ←
- if you intend changing a single datum, having ter minated the change, press the key OK multiple times until you exit the following function.

To return to the STAND-BY screen, use the key ←, repeating the operation multiple times.

## 11.2 AUGER LOADING FUNCTION

The following function is necessary to facilitate the switch on phase of the appliance, after accurate cleaning was conducted of the hopper (pellet container) to remove sawdust which, over time, is created on the base. See the chapter "Routine maintenance of the product".
Also check you have placed pellets in the tank and that the appliance is in the "OFF" or "FINAL CLEANING" status before starting the function.
The number expressed in seconds indicates the rotation time of the auger during the loading phase.
After this time is up, the auger stops automatically, after which the appliance can switch on.

OPERATING PROCEDURE:

*MENU >> SET USER >> AUGER LOADING*

Access the menu by pressing key OK

Scroll the items to SET USER with the key ↓

Access the menu by pressing key OK

Scroll the items to AUGER LOADING, key OK

Access the function by pressing key OK

The cleaner activates (for models with automatic cleaning), after which pellet loading is enabled. The display shows the time that passes up to 0, corresponding to loading switch off.

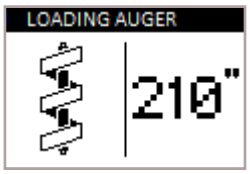


The appliance, at the end of loading, goes to the SET USER screen.

After the initial loading phase, a appears POPUP which indicates to suck the pellet from the brazier. This operation does not allow emptying the pellets in the ash drawer when the plate is rotated during ignition.

Always vacuum the brazier using an ash cleaner, risk of fire.

## 11.3 EXTRACTION/PELLET MIX

The PELLET-EXTRACTION mix setting allows you to change, with immediate effect, the quantity of pellets loaded in the brazier and the quantity of air inbound of the product, tested and inspected with DIN PLUS certified pellets. If you use other pellets or uncertified pellets, combustion may need to be adjusted. Normally, the change is executed on the EXTRACTION percentage to improve combustion; if oxygen adjustment is not efficient, you may need to also change the percentage of PELLETS falling.

OPERATING PROCEDURE:

*MENU >> SET USER >> P/E MIX*

Access the menu by pressing key OK

Scroll the items to SET USER, key ↓

Access the menu by pressing key OK

Scroll the items to P/E MIX with the key OK

Access the function by pressing key OK

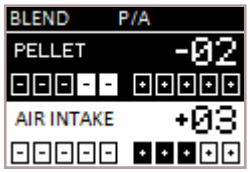


Edit the pellet setting with the keys ↑↓

The values vary from -5: reduction in pellet load in %
to +5: increase in pellet load in %

Confirm by pressing the key OK and pass to edit extraction.

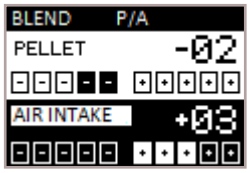


Edit the extraction setting, keys ↑↓

The values vary from -5: reduction in extraction in %
to +5: increase in extraction in %

Confirm by pressing the key OK and exit adjustment to return to the SET USER screen.

*As for example outlined above, a percentage of -2 PELLET and +3 EXTRACTION was set; this kind of setting results from the fact combustion is lacking oxygen and the pellets are small in size compared to the average 2cm.*

During editing, remember that:

- to return to the previous data, without saving the last data changed, press the key ←
- if you intend changing a single datum, having ter minated the change, press the key OK multiple times until you exit the function described in the paragraph.

To return to the STAND-BY screen, use the key ←, repeating the operation multiple times.

The number indicated, for setting change, refers to a percentage change which acts on the default parameters set on the electronic board, this only affects the work phase. These values should be changed in the event of poor combustion, due in many cases to use of pellets different from those used for testing the appliance.

## 11.4 STOVE STATUS

This function allows you to check the most important parameters are working properly on the appliance. Two screens are outlined below which show the list of real data of the product, useful for the support service during the control phases.

OPERATING PROCEDURE:

*MENU >> SET USER >> STOVE STATUS*

Access the menu by pressing key OK

Scroll the items to SET USER with the key ↓

Access the menu by pressing key OK

Scroll the items to STOVE STATUS with the key OK

Access the function by pressing key OK

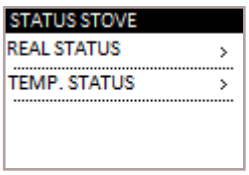


Select the type of screen you want to display, with the keys ↑↓

Access the relevant screen with the key OK

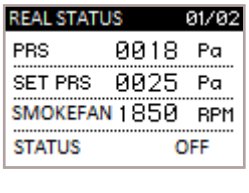


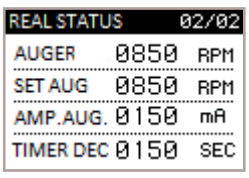


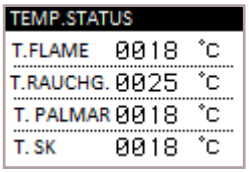

To return to the SET USER screen.
press the key ⓔ

To return to the STAND-BY screen, use the key ⓔ, repeating the operation multiple times.

## 11.5 ENABLE EXTERNAL THERMOSTAT

The following paragraph specifies how to enable the function that includes use of the external thermostat instead of the handheld device, to manage the ambient temperature. Re-connecting to the paragraph called "CONFIGURATION OF T.EXT THERMOSTAT", the procedure is illustrated below for reading the device by the electronic board.

OPERATING PROCEDURE:

*MENU >> SET USER >> SETTINGS >> ENABLE T.EXT*

Access the menu by pressing key OK

Scroll the items to SET USER with the key ↓

Access the menu by pressing key OK

Scroll the items to SETTINGS with the key ↓

Access the menu by pressing key OK

The first item on the menu, ENABLE T.EXT.

Tick using the key OK if you want to manage the ambient temperature with the external thermostat (not supplied) ①.

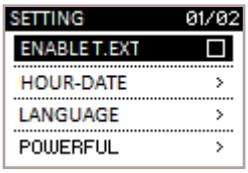


①

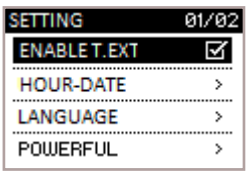


To return to the STAND-BY screen, use the key ⓔ repeating the operation multiple times.

The STAND-BY, instead of the ambient temperature detected and settable, displays:
• string T ON if the room in which the thermostat is installed has not yet reached the temperature required; ①
• the writing T OFF if in the room the ambient temperature is reached. ②

①

②

## 11.6 LANGUAGE

Based on the destination country or the user acquiring the product, this function includes a series of languages to set. The procedure follows to choose the desired language.

OPERATING PROCEDURE:

*MENU >> SET USER >> SETTINGS >> LANGUAGE*

Access the menu by pressing key OK

Scroll the items to SET USER with the key ↓

Access the menu by pressing key OK

Scroll the items to SETTINGS with the key ↓

Access the menu by pressing key OK

Scroll the items to LANGUAGE with the key ↓

Access the function by pressing key OK

Select the language by pressing the keys ↑ ↓

Confirm the language with the key OK and display the tick sign.

To return to the STAND-BY screen, use the key ⓔ, repeating the operation multiple times.

## 11.7 CONTRAST

The procedure follows to improve screen display if the graphic does not show the proposed information clearly.

OPERATING PROCEDURE:

*MENU >> SET USER >> SETTINGS >> CONTRAST*

Access the menu by pressing key OK

Scroll the items to SET USER with the key ↓

Access the menu by pressing key OK

Scroll the items to SETTINGS with the key ↓

Access the menu by pressing key OK

Scroll the items to CONTRAST, key ↓

On the function item, press with key OK

The screen appears to adjust contrast relating to the handheld device graphic, as in the figure.

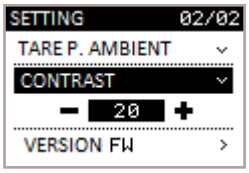

Edit the data highlighted using the keys

Confirm the data changed using the key OK

To return to the STAND-BY screen, use the key ←, repeating the operation multiple times.

## 11.8 FIRMWARE VERSION

To view the version of the firmware installed for the appliance model supplied, follow the procedure in this paragraph. This function is useful for the support centre to control availability of the new updates to install on the product, if necessary.

OPERATING PROCEDURE:

*MENU >> SET USER >> SETTINGS >> FW VERSION*

Access the menu by pressing key OK

Scroll the items to SET USER with the key ↓

Access the menu by pressing key OK

Scroll the items to SETTINGS with the key ↓

Access the menu by pressing key OK

Scroll the items to FIRMWARE VERSION with the key ↓

Access the function by pressing key OK

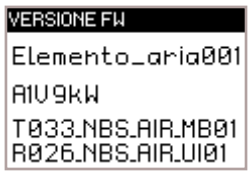


To return to the STAND-BY screen, use the key ←, repeating the operation multiple times.

## 11.9 ANTICONDENSATION (exhaust fumes temperature)

This function ensures that the temperature of exhaust gases remains higher than condensing temperature.

The function results in a slight increase of pellet consumption to remedy this condition.
The causes of condensation can be related to the installation but above all to the yield of the pellets and its size.

OPERATING PROCEDURE::

*MENU' >> SET USER >> SETTINGS >> ANTICONDENSATION*

Access the menu by pressing key OK

Scroll the items to SET USER with the key ↓

Access the menu by pressing key OK

Scroll the items to SETTINGS with the key ↓

Access the menu by pressing key OK

Scroll the items to ANTICONDENSA with the key ↓

Activate / Deactivate function by pressing

of the key OK

To return to the STAND-BY screen, use the key ←, repeating the operation multiple times.

### GENERAL INFORMATION NOTE:

When you pass from one screen to another, you display the following screen for a few seconds:

1

2

This screen indicates the handheld device is trying to communicate with the appliance, a useful operation to recover information to display to the end user. (1)
If communication is absent, the writing FIELD followed by a number appears. In this case, simply approach the appliance to re-establish communication. (2)

## 12 CHANNEL (where planned)

The products of the range equipped with channelling
are in two types, single duct channelling or double duct channelling. It can be disabled, manually set or auto-management enabled based on the temperature gradient you want to obtain in the room where channelling is installed.

## 12.1 SET SINGLE CHANNELLING

In this paragraph, the system is detailed to enable/disable and set in manual the
ventilation speed assigned to channelling.
Furthermore, the possibility is set to enable the automatic management function of channelling, linked to setting of the ambient temperature you want to obtain in the room.

OPERATING PROCEDURE:

*MENU >> SET USER >> CHANNELLING*

Access the menu by pressing key (OK)

Scroll the items to SET USER with the key (↓)

Access the menu by pressing key (OK)

First item in the "CHANNELLING" menu, key (OK)

The screen appears with setting of channelling, as in the figure.

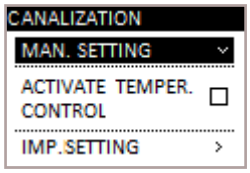


Confirm with key (OK)

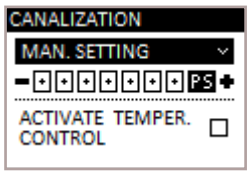


- SET MANUAL: allows you to edit the power of channelling, keys: (↑)(↓)
  0 - ventilation disabled;
  1-7 - setting range;
  PS - ventilation follows power to the fireplace set on the appliance.

If the PS function is not set, the fan is always restricted by the power of the product.

- ENABLE TEMPERATURE CONTROL: enables modulation of the ventilation once the setting has been reached;

Enable/disable with the key (OK)

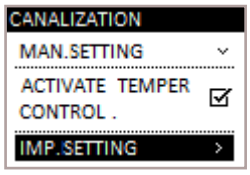


-- SET SETTING: allows you to edit the ambient temperature setting you want to reach in the channelled ambient.

Pressing the keys (↑)(↓) to enable/disable the flag if you want to manage the temperature of the zone to channel with the help of the external thermostat. (not supplied). Key (OK) to confirm.

Press the keys (↑)(↓) to set the temperature of the zone to channel with the help of an optional ambient probe, provided on request of Nobis s.r.l. (not supplies as standard)

If the flag is enabled for "channelling" temperature management with the external thermostat, it is not possible to change the temperature setting from the handheld device, but rather from the external thermostat.

## 12.2 SET CHANNELLING TIMER

In the THERMOSTAT TIMER menu, for models with channelling, you can set the channelling power (ventilation speed) and the temperature you want to obtain in the room where the ventilation outlet is installed. Having set all the values relating to programmed switch on of the appliance, the following screen appears.

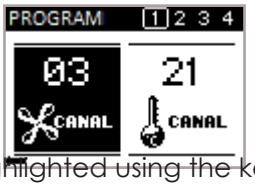


Edit the data highlighted using the keys (↑)(↓)

Confirm the data changed using the key (OK)

Repeat the same operation to set the next parameter;

Setting the ambient temperature for channelling, this is only managed if the TEMPERATURE CONTROL function is enabled, previously seen, ENABLE T.EXT in SET SETTING disabled in the CHANNELLING menu.

To return to the STAND-BY screen, use the key (OK), confirming all the settings.

## 12.3 DISPLAY CHANNELLING STATUS

To display the channelling status, from the STAND-BY status, press the key (←).
The display screen follows:

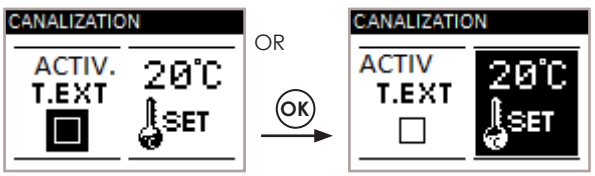


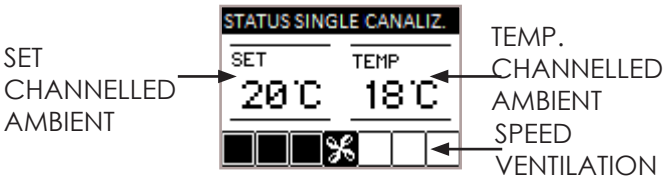

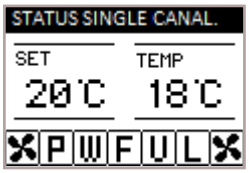


In the presence of the POWERFUL function, DISPLAY STATUS, you can also see that channelling is in this mode, as in the figure.

## 12.4 SET DOUBLE CHANNELLING

In this paragraph, the system is detailed to enable/disable and set in manual the ventilation speed assigned to channelling.
Furthermore, the possibility is set to enable the automatic management function of double channelling, linked to setting of the ambient temperature you want to obtain in the rooms.

OPERATING PROCEDURE:

*MENU >> SET USER >> CHANNELLING*

Access the menu by pressing key (OK)

Scroll the items to SET USER with the key (↓)

Access the menu by pressing key (OK)

First item in the "CHANNELLING" menu, key (OK)

The screen appears with setting of channelling, as in the figure.

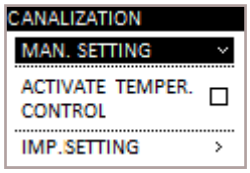


Confirm with key (OK)

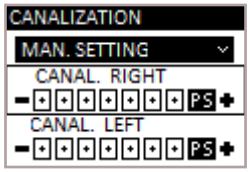


- SET MANUAL: allows you to edit the power of channelling, keys: (↑)(↓)
  0 - ventilation disabled;
  1-7 - setting range;
  PS - ventilation follows power to the fireplace set on the appliance.

Press key (OK) to confirm setting of the RH fan and pass to set the LH.

If the PS function is not set, the fan is always restricted by the power of the product.

- ENABLED TEMPERATURE CONTROL: enables modulation of the ventilation/s once the setting has been reached;

Enable/disable with the key (OK)

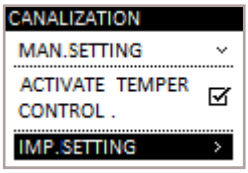


-- SET SETTING: allows you to edit the ambient temperature setting you want to reach in the channelled ambient.

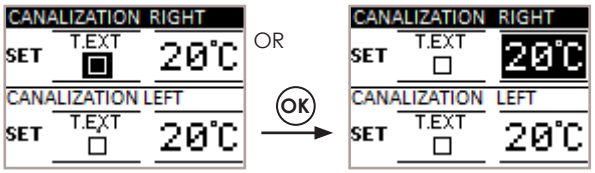


Pressing the keys (↑)(↓) to enable/disable the flag if you want to manage the temperature of the zone to channel with the help of the external thermostat. (not supplied). Key (OK) to confirm.

Press the keys (↑)(↓) to set the temperature of the zone to channel with the help of an optional ambient probe, provided on request of Nobis s.r.l.(not supplies as standard)

Having confirmed setting of the RH channelling, confirm with the key (OK) and repeat the same sequence of operations for the LH channelling.

If the flag is enabled for "channelling" temperature management with the external thermostat, it is not possible to change the temperature setting from the handheld device, but rather from the external thermostat.

## 12.5 SET CHANNELLING TIMER

In the THERMOSTAT TIMER menu, for models with channelling, you can set the channelling power (ventilation speed) and the temperature you want to obtain in the room where the ventilation outlets are installed. Having set all the values relating to programmed switch on of the appliance, the following screen appears.

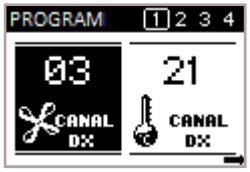


Edit the data highlighted using the keys

Confirm the data changed using the key OK

Repeat the same operation to set the following parameter;

Setting the ambient temperature for channelling, this is only managed if the TEMPERATURE CONTROL function is enabled, previously seen, ENABLE T.EXT in SET SETTING disabled in the CHANNELLING menu.

Having confirmed setting of the RH channelling, confirm with the key OK and repeat the same sequence of operations for the LH channelling.

Edit the data highlighted using the keys

Confirm the data changed using the key OK

Repeat the same operation to set the following parameter;

To return to the STAND-BY screen, use the key OK, confirming all the settings.

## 12.6 DISPLAY CHANNELLING STATUS

To display the channelling status, from the STAND-BY status, press the key ←.
The display screen follows:

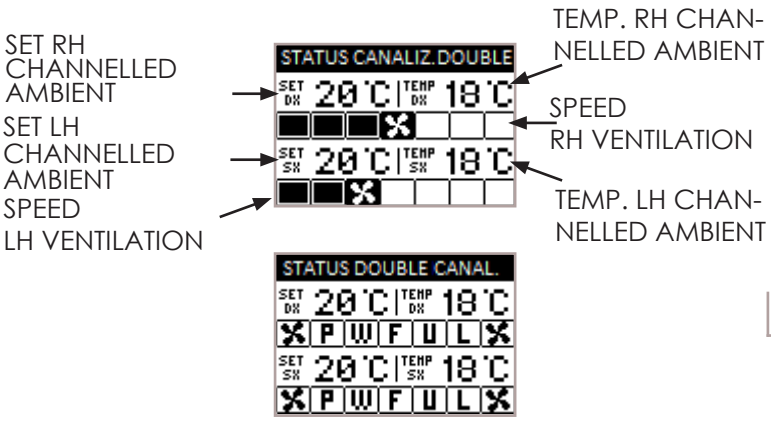


When the POWERFUL function is enabled, in display status, you can also see that channelling is in this mode, as in the figure below.

## 13 PHASES CONCISE DIAGRAM

| PHASE | DESCRIPTION |
|---|---|
| *SWITCH ON* *WAITING FLAME* *FLAME PHASE* | - The phase starts to pre-heat the re sistor and the pellet starts to fall in the brazier.<br>- The pellet switches on by taking ad vantage of the heat in the inlet air which passes by the duct of the incandescent resistor.<br>- Pellet loading restarts and the flame develops. |
| *WORK* | The appliance has terminated the switch on phase and goes to the working power set. |
| *SAVING* | The desired ambient temperature is reached. |
| *BRAZIER CLEANING* | The cleaning phase is enabled of the brazier without movement of the cleaner (periodic function). |
| 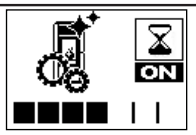 *CLEANER ENABLED* | The brazier cleaning phase is running with the cleaner enabled. The appliance switches off and switches back on autonomously. |
| *RESTART* | Switch on is required after a cooling phase. Having reached this condition, the appliance automatically starts. |
| *FINAL CLEANING* | The appliance is in the switch off phase and the cooling phase has not yet terminated. |
| *OFF* | The appliance is OFF and all the motors are disabled. |

## 14 FUNCTIONS CONCISE DIAGRAM

| PHASE | DESCRIPTION |
|---|---|
| *MAN WORK* | Ambient setting in MAN therefore the appliance only works with the power to the fireplace set (never going to saving) |

| PHASE | DESCRIPTION |
|---|---|
| THERMOSTAT | Management was chosen of the ambient temperature using an external thermostat (not supplied by the manufacturer) |
| 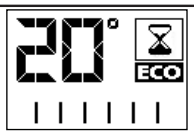 AIR CON. COMFORT | With the AIR CON. COMFORT enabled, the product automatically switches off on reaching the ambient setting set (see relative paragraph). |
| AUTO | The appliance automatically manages the power to the fireplace and ventilation (where present and enabled) to guarantee better comfort (see specific paragraph). |
| POWERFUL | The appliance works with ventilation at the maximum speed to speed up heating of the environment. (see relative paragraph) |
| OPTIMAL FLAME | The appliance optimises combustion by reducing the pellet load, however yield is guaranteed. |

## 15 SIGNALS CONCISE DIAGRAM

| PHASE | DESCRIPTION |
|---|---|
| ALARM | The appliance is in the alarm status, consult the "ALARMS" chapter to check the type. |
| ANOMALY | The appliance signals an anomaly, without causing it to switch off. See "ANOMALIES CONCISE DIAGRAM". |
| BATTERY 10% | The handheld device batteries are almost flat. |
| FLAT BATTERY | The handheld device batteries are flat. Replace them. |
| SERVICE HOURS | The threshold for the working hours set has been reached. You are advised to request extraordinary maintenance of the appliance by authorised staff. |

## 16 ANOMALIES CONCISE DIAGRAM

| PHASE | DESCRIPTION |
|---|---|
| S.PRESSURE FAULT | The appliance signals a malfunction of the sensor controlling correct combustion. For safety purposes, while waiting for the technician, the appliance is set to saving mode. |
| HOT SMOKE | The maximum smoke temperature threshold has been reached; the appliance for a period sets to saving mode with ventilation at maximum power to cool the body. |
| EXCESS LOAD | If the quantity of pellets is high for the power of the machine. In P/E mix, reduce the pellet load working on the % (see specific paragraph) |
| S.FLAME FAULT | The appliance signals a malfunction of the probe detecting the flame. For safety purposes, while waiting for technical intervention, the appliance sets to saving mode. |

| PHASE | DESCRIPTION |
|---|---|
| | The anomaly is presented when the user opens the door or ash pan or pellet door; at this point, pellet loading inside the brazier stops and the electronics emit an acoustic signal. The user, to return to correct operation, must close the doors. If this operation is not carried out, the product signals an alarm. |
| 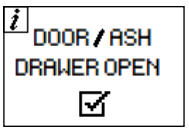 | |
| 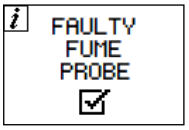 | Anomaly of the probe controlling the temperature of the discharge smoke, contact the authorised technician to solve the fault. |

The anomalies, differing from alarms, are signals which automatically reset, once the cause that generated them has been eliminated. Furthermore, the signalling does not cause the appliance to switch off, guaranteeing however heating.

Some anomalies, to be resolved, need technical intervention by authorised staff. Despite the appliance continuing to work, the user must ensure the problem is resolved. **Negligence causes the product to malfunction**.

# 17 DESCRIPTION OF ALARMS

Each alarm condition causes the appliance to immediately switch off. Press the switch on key P3 to reset the alarm. Before switching back on the appliance, check signalling is resolved.

| ALARM CODE | REASON |
|---|---|
| **01** **BLACK OUT** | No power during the work phase |
| | **SOLUTION** |
| | Press the switch off key and repeat switch on of the appliance |
| | If the problem persists, contact the Support Service. |

| ALARM CODE | REASON |
|---|---|
| **02** **NO SWITCH ON** | The pellet tank is empty. |
| | Calibration of the pellets and suction during the start-up phase inadequate. |
| | Ignition resistor faulty or out of position |
| | **SOLUTION** |
| | Check there are pellets in the tank. If necessary, load. |
| | If the problem persists, contact the Support Service |

| ALARM CODE | REASON |
|---|---|
| **03** **PELLETS FINISHED** | The pellet tank is empty. |
| | The gearmotor is not loading pellets |
| | Lack of pellets loading |
| | **SOLUTION** |
| | Check there are pellets in the tank. If necessary, load |
| | Empty the tank to check that there are no objects inside it. |
| | Adjust, by increasing the load of pellets, from "P/E MIX" |
| | If the problem persists, contact the Support Service |

| ALARM CODE | REASON |
|---|---|
| **04** **SMOKE TEMPERATURE** | Combustion in the brazier is not optimal as it is clogged or the inner passages of the appliance are clogged. |
| | The tangential fan (if present) is not working properly or is damaged. |
| | **SOLUTION** |
| | Switch the product off and back on again, activating the cleaner; adjust the combustion with the "P/E mix". |
| | If the problem persists, contact the Support Service |

| ALARM CODE | REASON |
|---|---|
| **05** **EXTRACTOR ROTATIONS NOT RESPECTED** | The rotations of the smoke extractor show a loss of efficiency due to obstruction of the fan or a drop in voltage. |
| | **SOLUTION** |
| | If the problem persists, contact the Support Service |

| ALARM CODE | REASON |
|---|---|
| **06** **FAULTY SMOKE EXTRACTOR** | No power supply to the smoke extractor |
| | The smoke extractor is blocked |
| | **SOLUTION** |
| | If the problem persists, contact the Support Service |

| ALARM CODE | REASON |
|---|---|
| **07** **GEARMOTOR ROTATIONS NOT RESPECTED PELLET LOADING** | The rotations of the gearmotor present a loss of efficiency due to a drop in voltage. |
| | **SOLUTION** |
| | If the problem persists, contact the Support Service |

| ALARM CODE | REASON |
|---|---|
| **08** **PELLET LOADING GEARMOTOR FAULT** | Gearmotor encoder not working or not connected correctly |
| | No power to gearmotor |
| | **SOLUTION** |
| | If the problem persists, contact the Support Service |

| ALARM CODE | REASON |
|---|---|
| **09** **PELLET LOADING AUGER BLOCKED** | Possible foreign body or sawdust preventing correct movement. |
| | **SOLUTION** |
| | Empty the tank and check for foreign bodies. |
| | If the problem persists, contact the Support Service |

| ALARM CODE | REASON |
|---|---|
| **10** **PELLET LOADING AUGER POWER SUPPLY DEFECT** | No power supply or power supplied by electronic control unit not correct |
| | **SOLUTION** |
| | If the problem persists, contact the Support Service |

| ALARM CODE | REASON |
|---|---|
| **11** **MINIMUM PRESSURE PASCAL** | The sensor does not detect negative air pressure inbound of the appliance. |
| | **SOLUTION** |
| | Check the door and ash pan are closed correctly, check if the air intake tube is obstructed. |
| | If the problem persists, ccontact the Support Service. |

| ALARM CODE | REASON |
|---|---|
| **12**<br>**BRAZIER CLEANER FAULT** | The cleaner has not completed movement and is not found in the correct position or the fire door is not closed correctly. |
| | **SOLUTION** |
| | Check if the door is closed correctly, reset the alarm and wait for the product to go to OFF status. Disconnect and reconnected current, the system re-activates the cleaner, checking the correct position again. |
| | If the problem persists, contact the Support Service |

| ALARM CODE | REASON |
|---|---|
| **13**<br>**NEGATIVE PRESSURE IN CHIMNEY FLUE** | The chimney flue is blocked. |
| | The sensor reading the negative pressure is not working properly. |
| | **SOLUTION** |
| | Check the chimney flue is not blocked, contact a chimney sweep to clean it. |
| | If the problem persists, contact the Support Service |

| ALARM CODE | REASON |
|---|---|
| **14**<br>**THERMOSTAT MANUAL RESET** | You have to manually reset the thermostat connected to the hopper. |
| | Combustion in the brazier is not optimal as the brazier is clogged or the inner passages of the appliance are clogged. |
| | Ventilation, where present and active, may not be working properly. |
| | **SOLUTION** |
| | Reset the thermostat by pressing the button on the back of the appliance. |
| | Switch off the product, switch on the system again to activate the cleaner and adjust combustion with the P/E mix. |
| | If the problem persists, contact the Support Service. |

MANUAL RESET THERMAL SWITCH POSITION

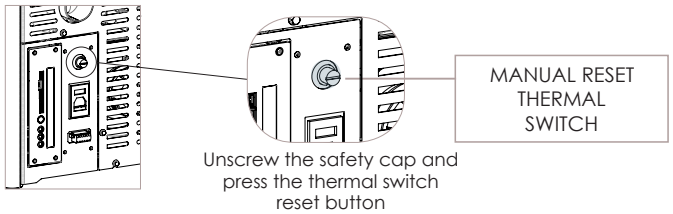


Unscrew the safety cap and press the thermal switch reset button

| ALARM CODE | REASON |
|---|---|
| **15**<br>**FIRE DOOR/ ASH PAN OPEN** | During the cleaning phase of the product, the door to the fire or the ash pan was not closed properly. |
| | **SOLUTION** |
| | Check correct closure of the fire door and/ or correct insertion of the ash pan in its compartment. |
| | If the problem persists, contact the Support Service |

| ALARM CODE | REASON |
|---|---|
| **16**<br>**PELLET TANK DOOR OPEN** | During the pellet loading phase of the product, the tank door was not closed properly. |
| | **SOLUTION** |
| | Check the pellet tank door is closed properly. |
| | If the problem persists, contact the Support Service |

| ALARM CODE | REASON |
|---|---|
| **18**<br>**FLAME PROBE** | Simultaneous flame probe and smoke probe fault. |
| | **SOLUTION** |
| | Contact Technical Support. |

| ALARM CODE | REASON |
|---|---|
| **22**<br>**FLAME TEMPERATURE** | Combustion in the brazier is not optimal as the brazier is clogged or the inner passages of the appliance are clogged. |
| | The tangential fan (if present) is not working properly or is damaged. |
| | **SOLUTION** |
| | Switch the product off and back on again, activating the cleaner; adjust the combustion with the "P/E mix". |
| | If the problem persists, contact the Support Service. |

| ALARM CODE | REASON |
|---|---|
| **23**<br>**AUGER TRIAC** | Anomaly of an internal component of the electronic board that manages the pellet loading auger. |
| | Possible drops in voltage or wrong voltage input to the device. |
| | **SOLUTION** |
| | Check power supply voltage. |
| | If the problem persists, contact the Support Service |

| ALARM CODE | REASON |
|---|---|
| **24**<br>**AUGER PHASE** | No connection of cabling that brings power to the auger gearmotor. |
| | **SOLUTION** |
| | If the problem persists, contact the Support Service |

| CODICE ALLARME | MOTIVAZIONE |
|---|---|
| **28**<br>**REVOLUTION FAILURE SMOKE ENCODER** | Smoke extractor encoder not working or not connected correctly |
| | **RISOLUZIONE** |
| | If the problem persists, contact the Support Service |

| CODICE ALLARME | MOTIVAZIONE |
|---|---|
| **29**<br>**CYCLE LIMIT CLEANING** | The maximum limit of cleaning cycles allowed during a work phase has been reached prolonged. |
| | **RISOLUZIONE** |
| | In safety, vacuum the brazier and switch on again. |
| | If the problem persists, contact the Support Service |

## 18 CLEANING THE APPLIANCE

Product installation must take place in in such a way as to ensure easy access to the appliance itself and to the flue for cleaning and maintenance operations.

Please carefully adhere to the following instructions for correct cleaning of the appliance. Non-compliance could cause its malfunctioning.

Before carrying out any cleaning operation on the appliance, take the following precautions:

- switch off the product and in "OFF" status disconnect the power supply cable;
- ensure all the parts are cold to touch;
- ensure the combustion ash is completely out.

To clean the surfaces, on the painted metal parts, use a cloth soaked in water and soap.
Use of abrasive detergents or diluents causes damage to the surface of the product.

### 18.1 CLEANING THE FIREPLACE

Open the fire door, using the specific tool and:
• vacuum the slide bringing the ash to the brazier; • dismantle the flame trap, vacuum the compartment hidden by the flame trap (paying utmost attention not to damage the sensor placed behind the flame trap).
• the vermiculite does not require cleaning, in any case if you intend eliminating the soot dust, only use a soft bristle brush.

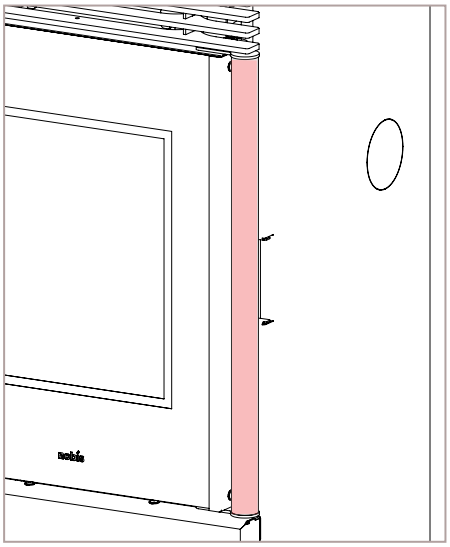

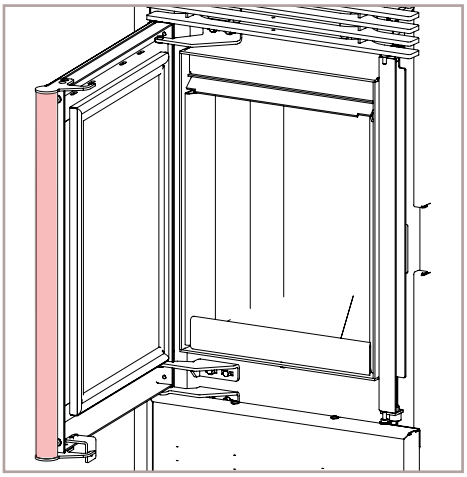

To extract the flame trap, lift it slightly as in the figure below:

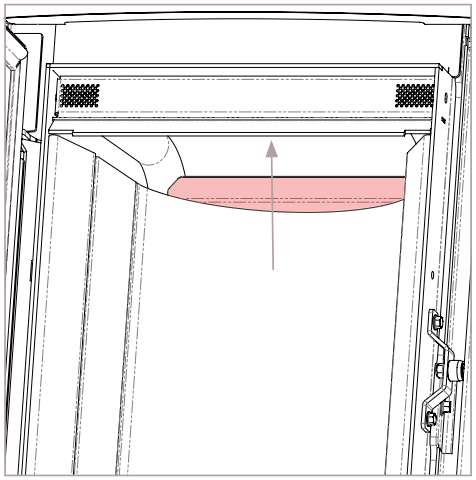

Remove it by bringing the lever towards you with slight movement downwards as in the figure below:

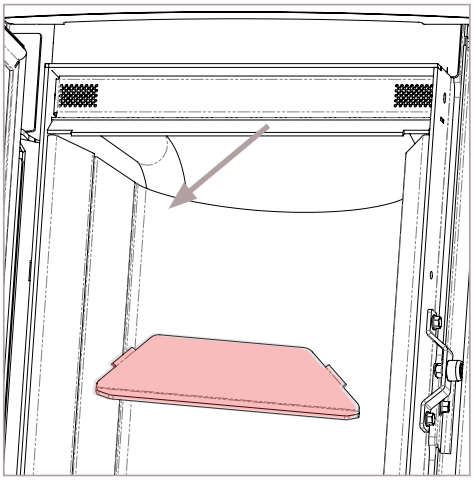

With a soft bristle brush, eliminate the combustion particulate, allowing it to fall in the slide beneath.

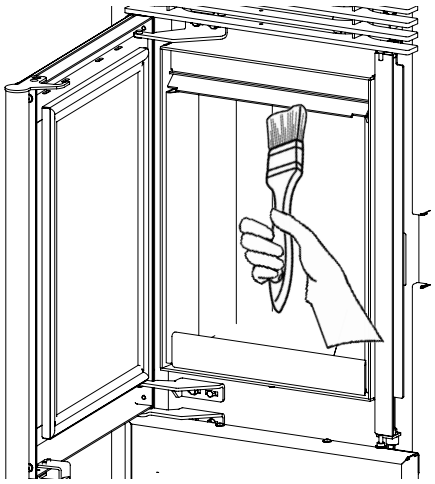

Vacuum the slide, the hatch and the surface hidden by the flame trap, paying attention not to knock the vacuum cleaner nozzle off the vermiculite.

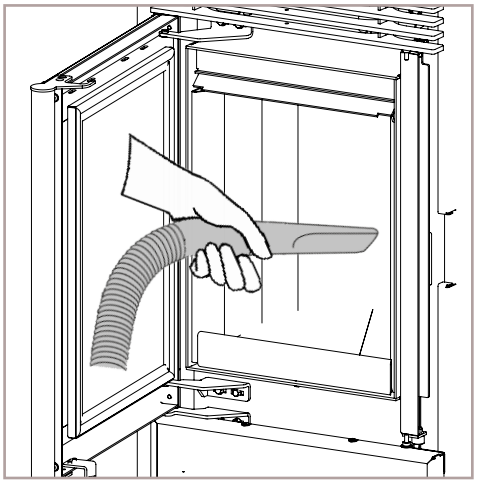

## 18.2 CLEANING THE GLASS DOOR

To clean the glass, use a cotton cloth or kitchen paper. You are advised to clean the glass using a damp cloth with water and combustion ash (with an abrasive function), avoiding use of products with additives that could, over time, wear the seals, glass and paint.

Do not switch on the appliance if the glass is damaged. Contact the support service to replace it.

OPERATING PROCEDURE:
Clean with a cotton cloth as in the figure below:

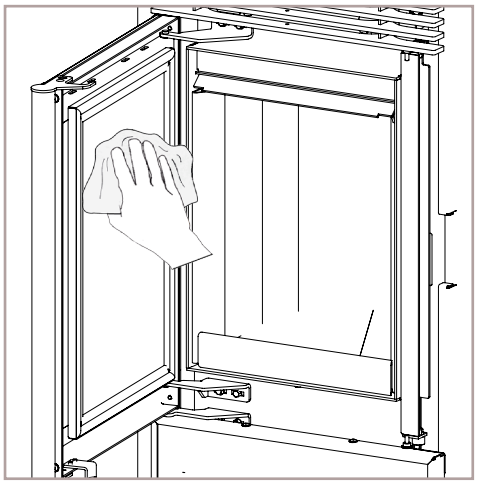

## 18.3 CLEANING THE ASH PAN

Remove the pan from the appliance and remove the ash deposited, using an ash vacuum cleaner; pay utmost attention to the presence of embers that could still be hot and which could damage the appliance used for cleaning.

The cleaning operations depend on the quality of the pellets used and the frequency of use of the product. It can happen that such operations must be carried out more frequently than stated in the manual.

OPERATING PROCEDURE:
Open the door positioned under the fire door, as in the figure below:

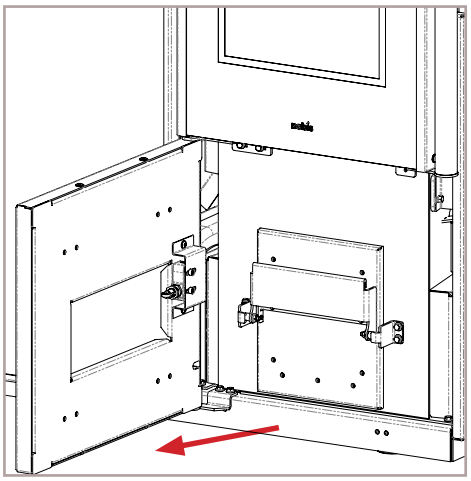

Open the ash pan using the handle, as in the figure below:

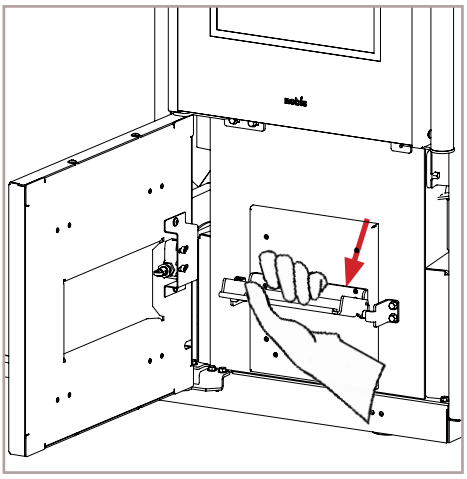

Remove the ash pan and empty it, as in the figure below:

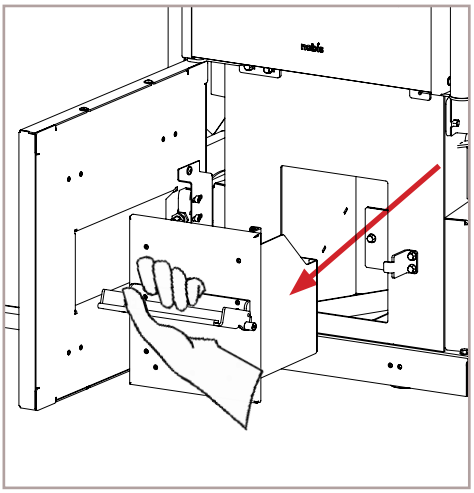

CLEANING CYCLES TABLE
Below, the control and/or maintenance intervention are summarised which are indispensable for correct appliance operation.

| PARTS/FREQUENCY | TIME |
|---|---|
| Ash pan (approx. time) | 7 DD |
| Glass | 2-3 DD |
| Extraction pipe * | 1 SE |
| Door seal/ash pan* | 1 SE |
| Tube bundle scraper (where present) | 7 DD |
| Chimney flue | 1 SE |
| Combustion chamber | 2-3 DD |
| Vacuum pellet tank | 30 DD |
| Electromechanical components* | 1 SE |

LEGEND:
* - operations which can be carried out by a technician authorised by the manufacturer;
DD - day/s
SE - season

# 19 WIRING DIAGRAM

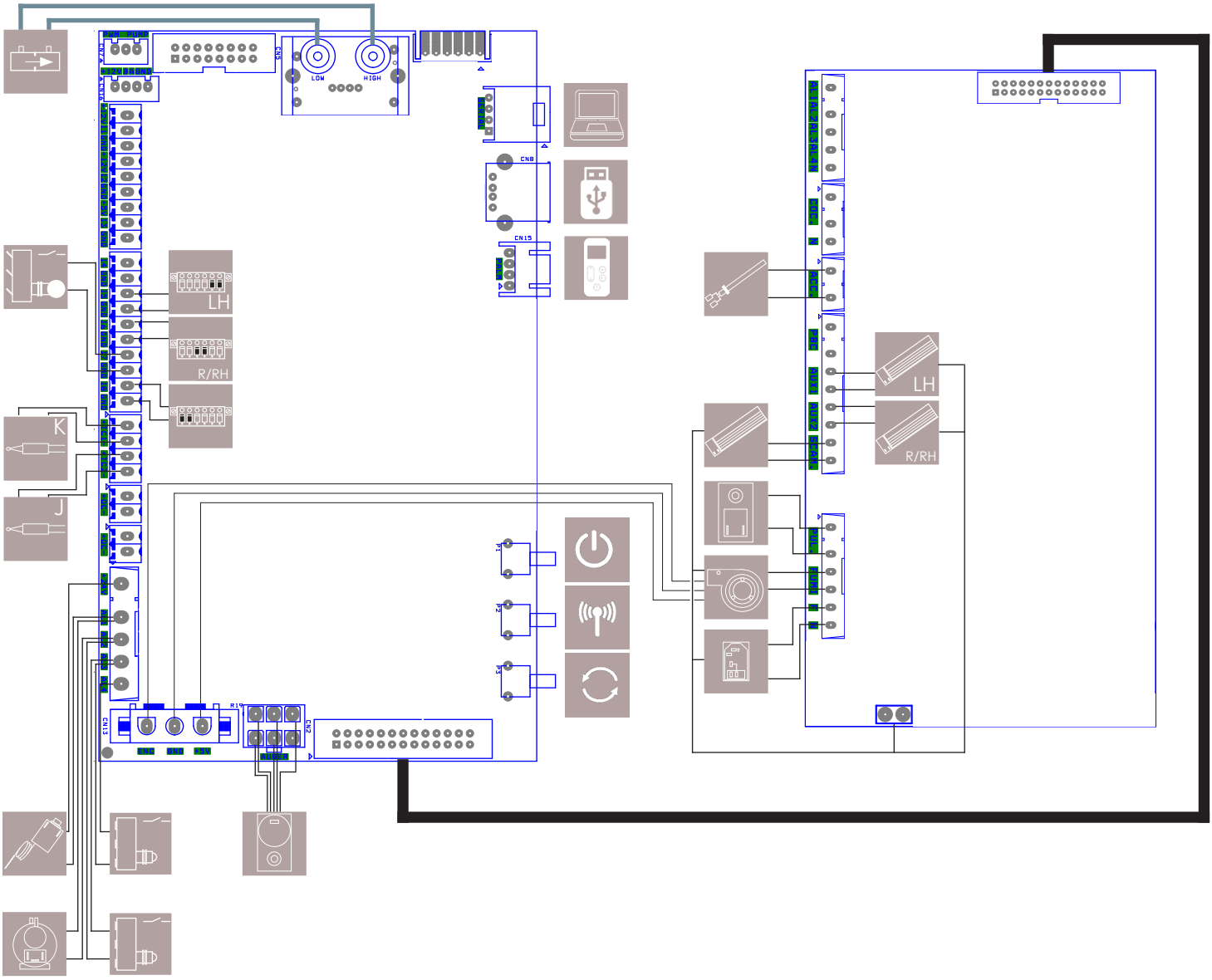


LEGEND:

- PRESSURE SENSOR
- STROKE COUNTER MECHANICAL CLEANER
- TERMINAL BOARD CONNECTION T.EXTERNAL
- FLAME PROBE
- SMOKE PROBE
- GEARMOTOR BLDC 24V
- SMOKE EXTRACTOR
- MANUAL RESET THERMAL SWITCH
- RESISTOR SWITCH ON
- GEARMOTOR MECHANICAL CLEANER
- CONTACT DOOR/ ASH PAN (1) PELLET TANK (2)
- 220V SOCKET WITH ON/OFF SWITCH AND FUSE
- SAFETY VACUUM SWITCH
- VENTILATION FRONT
- PC CONNECTION (technical support only)
- USB CONNECTION (technical support only)
- EMERGENCY CABLE HANDHELD DEVICE
- APPLIANCE SWITCH ON KEY
- REMOTE UNIT SELECTION KEY
- UPGRADE FW KEY (technical support only)
- VENTILATION REAR OR RH
- TERMINAL BOARD PROBE OR T.EXT REAR OR REAR RH
- VENTILATION REAR LH
- TERMINAL BOARD CONNECTION PROBE OR T.EXT LH

MAINTENANCE

| DATE | INTERVENTION CARRIED OUT |
|---|---|
| | |
| | |
| | |
| | |
| | |
| | |
| | |
| | |
| | |
| | |
| | |
| | |
| | |
| | |
| | |
| | |
| | |
| | |
| | |
| | |
| | |
| | |
| | |
| | |

| NOTE |
| --- |
| |
| |
| |
| |
| |
| |
| |
| |
| |
| |
| |
| |
| |
| |
| |
| |
| |
| |
| |
| |
| |
| |
| |
| |
| |
| |

| NOTE |
| --- |
| |
| |
| |
| |
| |
| |
| |
| |
| |
| |
| |
| |
| |
| |
| |
| |
| |
| |
| |
| |
| |
| |
| |
| |
| |
| |

YOUR STOVE, OUR PASSION

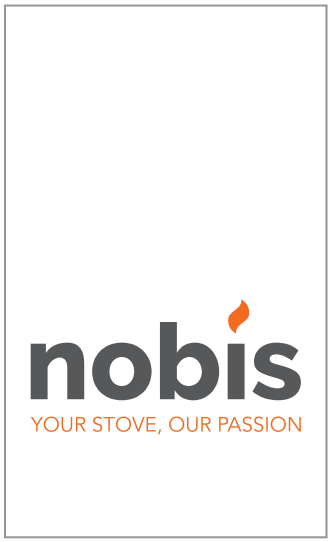

**NOBIS srl**
Via Palazzolo N.11
25037 - Pontoglio - BS
www.nobisfire.it

Nobis Srl cannot be held in any way liable for any errors in this manual and considers itself free to change the features of its products without prior warning.

*Cod.110-002-0013N_S4*